FROM THE EDITORS OF *POPULAR WOODWORKING MAGAZINE*

Workholding Solutions

9 SHOP PROJECTS & TECHNIQUES
From the Past & Present

MOXON'S INGENIOUS BENCH VISE

MAKING & USING SAWHORSES

RULES FOR WORKBENCHES

popularwoodworking.com

SPONSORED BY Lee Valley

Workshop Extension

Whether you need a pop-up workbench due to a lack of adequate workshop space or need an extension to an existing workbench because you have multiple projects on the go, a Veritas® Worksurface™ lets you get on with your project. The 1½″ thick portable platform is made from tough, stable Baltic birch plywood and features an array of ¾″ diameter dog holes, plus a perimeter of ¼-20 T-slot tracks, making it compatible with a wide range of T-slot track and ¾″ dog-hole mount accessories. It will change how you work, where you work, and how much you can work on at a time.

For more information about these clamping accessories, view our Workholding Jigs & Fixtures catalog online at leevalley.com.

1-800-683-8170
leevalley.com

1. Veritas® Worksurface, Small 13K14.01
2. Veritas® Worksurface, Medium 13K14.05
3. Veritas® Worksurface, Large 13K14.09
4. Veritas® Large Risers, pair 13K14.10
5. H-P Horiz. Toggle Clamp with T-Track Plate 50F01.32
6. Veritas® T-Slot Track Hold-Down 13K10.12
7. Veritas® Bench Blade, ¾″ Standard Post 05G22.10
8. Veritas® Wonder Pup®, each 05G10.02
9. Veritas® 9¾″ Planing Stop, ¾″ Posts 05G23.01
10. Veritas® Surface Clamp 05G19.01
11. Veritas® Fast-Action Hold-Down 05G47.01
12. Veritas® T-Slot Track Clamp 13K10.14
13. Veritas® 2⅜″ Bench Pups®, pair 05G04.04
14. Veritas® Muzzles for Bench Pups®, pair 05G04.06

Lee Valley & veritas®

Find us on:

CONTENTS

BENCH PHOTO BY AL PARRISH; BINDING CLAMPS PHOTO BY DON WILLIAMS; RAKE PHOTO BY PETER FOLLANSBEE

Rules for Workbenches

BY CHRISTOPHER SCHWARZ

Plus: 10 Fixes for an Existing Bench

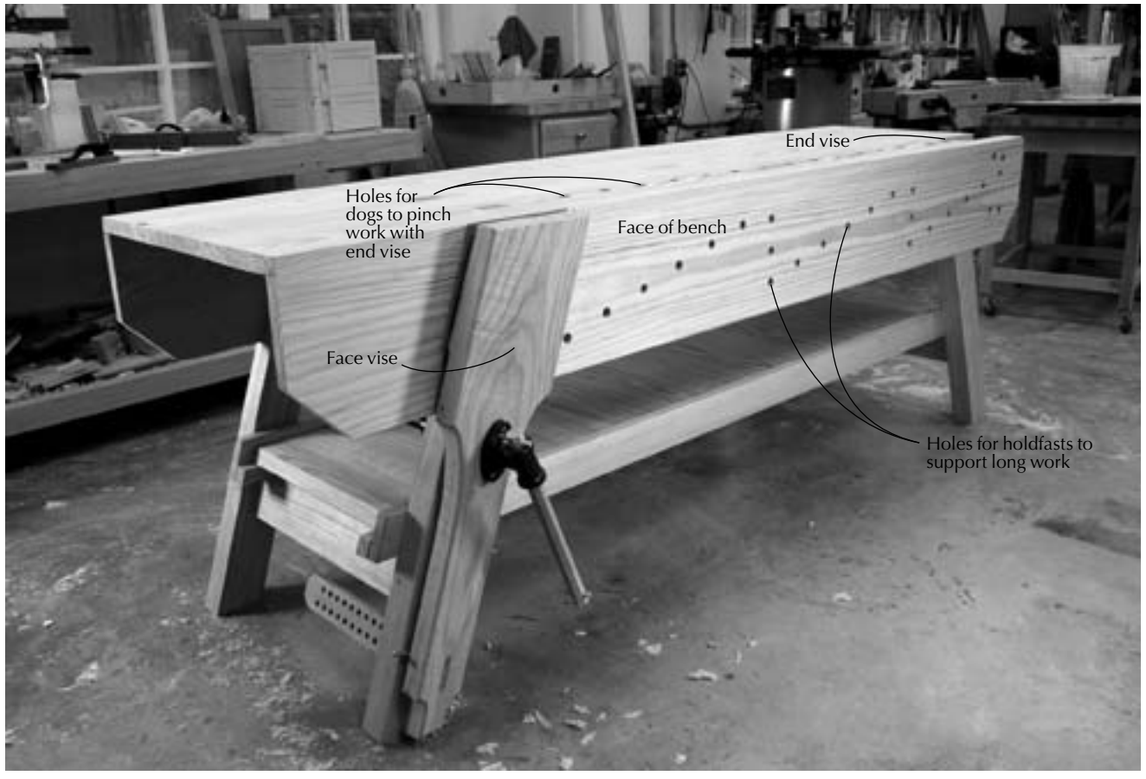

Nicholson bench. *This workbench form is less common today than it was 150 years ago, but it is still a sound bench because it allows you to perform all of the critical workbench operations with relative ease. Benches are a triumph of function over form.*

When it comes to building or buying a bench, most woodworkers get wrapped up in what form it should take. Should it be a continental bench popularized by Frank Klausz? A Shaker bench like the one at the Hancock community? How about a British version like Ian Kirby's?

Copying a well-known form is a natural tack to take. After all, when woodworkers buy or build their first workbench, they are in the early stages of learning the craft. They don't know what sort of bench or vises they need, or why one bench looks different than another. So they pick a form that looks good to them – occasionally mixing and matching bits and pieces from different forms – and get busy.

That, I believe, is the seed of the problem with workbenches today. Many commercial workbenches are missing key functions that make workholding easier. And many classic bench forms get built with modifications that make them frustrating in use.

What's worse, the user might not even know that he or she is struggling. Woodworking is a solitary pursuit, and it's rare to use someone else's bench.

During the last 10 years, I've built a number of classic bench forms, and I've worked on craftsman-made and commercial benches of different stripes. I've been stunned by how awful some workbenches can be at some tasks, and I've also seen brilliantly realized designs.

And now, after all this work, I've concluded that it doesn't matter what sort of bench you have as long as it performs a set of core functions with ease. I've boiled down these core functions into 10 rules for building (or buying) a workbench. As long as your bench obeys these rules (or most of them), you will be able to hold almost any workpiece for any task with a minimum of fuss. This will add speed and enjoyment to your time in the shop and reduce the amount of time you fuss with setups.

Do You Even Need a Bench?

Before we get to the rules, it's fair to say that a lot of the best commercial woodworking today is done on benches that disregard many of these rules. In production shops, it's rare to find a traditional bench used in a traditional manner. More often, a commercial woodworker will have something akin to a clamping table, or even a door on sawhorses. And they can turn out high-quality work that will blow you away.

In 2006 I was teaching a class in hand work at a school where Thomas Stangeland, a maestro at Greene & Greene-inspired work, was also teaching a class. Though we both strive for the same result in craftsmanship, the processes we use couldn't be more different. He builds furniture for a living, and he enjoys it. I build furniture because I enjoy it, and I sell an occasional piece.

One evening we each gave a presentation to the students about our work and I showed an image of the enormous French workbench I'd built the year before and discussed its unusual history.

Thomas then got up and said he wished he had a picture of his workbench: a door on a couple horses. He said that a commercial shop had no time to waste on building a traditional bench. And with his power-tool approach, all he needs is a flat surface.

It's hard to argue with the end result. His furniture is beautiful.

But what's important here is that while you can build with the door-off-the-floor approach, there are many commercial woodworkers who still see the utility of a traditional workbench. Chairmaker and furniture maker Brian Boggs uses more newfangled routers and shop-made devices with aluminum

A flat surface. *This rig serves as the assembly bench in the Popular Woodworking shop, but if you put a vise on it somewhere, it could serve as a workbench in a production shop. It is simple and allows great flexibility for clamping. But some basic operations with this setup would be tricky.*

Mass. *This French-style workbench weighs more than 325 pounds. The top is 4" thick. The legs are 5" square. All this mass absorbs vibration and makes every cutting operation smoother.*

PHOTOS BY THE AUTHOR

Lanky. *Spindly workbenches are nothing new. This anemic example from the early 20th century is too small and lacks mass. Sadly, there are modern ones that are even worse.*

extrusions than I have ever seen. And he still has two enormous traditional workbenches that see constant use. Before Kelly Mehler opened a woodworking school, I visited his commercial shop and got a chance to inspect his vintage bench, which saw daily use.

The point is that a good bench won't make you a better woodworker, and a not-quite-a-bench won't doom you to failure. But a good bench will make many operations easier. It's simply a tool: the biggest clamp in the shop.

Rule No. 1: Always Add Mass

Always overbuild your workbench by adding mass. There is a saying in boatbuilding: If it looks fair, it is fair. For workbenches, here's a maxim: If it looks stout, then make it doubly so. Everything about a workbench takes punishment that is akin to a kitchen chair in a house full of 8-year-old boys.

Early Roman workbenches were built like a Windsor chair. Stout legs were tenoned into a massive top and wedged in place. Traditional French workbenches had massive tops (6" thick), with legs that were big enough to be called tree trunks. Later workbenches relied more on engineering than mass. The classic continental-style workbench uses a trestle design and dovetails in the aprons and vises to create a bench for the ages. The 19th-century English workbench uses an early torsion-box design to create a stable place to work. And good-quality modern workbenches use threaded rods and bolts to tighten up a design that lacks mass.

Many inexpensive commercial benches are ridiculously rickety. They sway and rack under hand pressure. You can push them across your shop by performing simple operations: routing, sawing, planing. If the bench looks delicate or its components are sized like a modern dining table, I would take a closer look before committing.

A big thick top and stout legs add mass that will help your work. Heavy cabinet saws with lots of cast iron tend to run smoother. The same goes with benches. Once your bench hits about 300 pounds, it won't move unless you want it to move.

Rule No. 2: Use Stout Joints

Overbuild your workbench by using the best joints. These are times to whip out the through-tenon and dovetail.

If you followed rule No. 1, then rule No. 2 should be no problem. Your joints will be sized to fit the massive scale of your components. If you cannot rely on mass, then you should beef things up with superior joinery. While dovetails and through-tenons are overkill for a towel rack, their heft is good for a bench.

That's because you are applying racking force to the workbench with typical operations and your vises will do their best to tear apart your bench. All wooden vises need to be overbuilt or they will self-destruct when you cinch them down hard. I've even seen a vise rip a benchtop from its base.

Make your tenons thick and your mortises deep. If you know how to drawbore a mortise-and-tenon joint, this is one good application. Have you ever been in a timber-framed barn? Did you look at the joints? They're massive and pegged. Imitate that.

I think benches are a good place to practice your skills at cutting these classic joints, but some woodworkers still resist. If that's you, you should investigate hardware to strengthen your bench. Threaded rods, bed bolts, Veritas bench bolts or even stove bolts can turn a spindly assembly into something rigid that can be snugged up if it loosens. The hardware won't give you mass, but it will strengthen a rickety assembly.

Don't skimp here. *Think big when cutting the joints for your workbench. The small tenons are $1\frac{1}{4}$" thick and $2\frac{1}{2}$" long. The larger tenons are $2\frac{1}{2}$" thick and 2" long.*

Materials. *These classic European workbenches were made from fine-grained European beech. Shouldn't you do the same? Not necessarily. Choose a wood that is like beech is in Europe: stiff, inexpensive and plentiful.*

Rule No. 3: Pick Your Wood Based on Its Stiffness, Not Its Species

Use a stiff, inexpensive and common wood to build your bench. Showcase benches made from exotic materials are nice. No argument there. But focus on the functions before the flash. I'd rather have a construction-lumber bench that followed all these rules than a beautiful European beech bench that skipped even one of these concepts.

There's a lot of confusion on picking a wood for a bench. Most European benches were built using fine-grained steamed European beech. And many woodworkers go to lengths to purchase precious beech for their workbenches. After all, who wants to argue with hundreds of years of tradition?

I do. European cabinetmakers didn't choose beech because of some magic quality of *Fagus sylvatica*. They chose it because it was dense, stiff, plentiful and inexpensive. In the United States, beech is dense, stiff, hard to find and (sometimes) a bit spendy. You can, of course, use it to build a bench, but you will pay a pretty penny for the privilege. And it will have no demonstrable advantage over a bench built from a cheaper species.

Other woodworkers, tacking toward the sensible, use hard or soft maple for their benches, rationalizing that it is like the beech of the New World. And indeed, the maples have all the qualities of a good species for a workbench.

Maple is stiff, resists denting and can span long distances without much of a support structure below it. But so can other species. In fact, if you went by the numbers from the wood technologists alone, you'd build your bench from shagbark hickory, despite its difficult nature.

Once you look at the characteristics that make a good species for a workbench, you'll see that white oak, Southern yellow pine, fir or just about any species (excepting basswood and the soft white pines) will perform fine.

Rule No. 4: Use a Time-tested Design

After you sketch out your workbench design but before you cut any wood, compare your design with historical designs of benches. If your bench appears to be a radical design or looks unlike anything built before, chances are your design is flawed.

I've seen workbenches with pneumatic face vises. Why? I've seen a workbench that had two twin-screw vises: One vise for the right end of the workbench that was matched to work with two long rows of dogs along the length of the benchtop; and a second twin-screw vise on the face of the bench that was matched to two more rows of dogs across the width of the bench.

Now I'm certain that there are a few woodworkers who would really need this arrangement – perhaps someone who has to work on a circular tabletop on one end of the bench and a Windsor chair seat at the other. But for most people who build cabinets and furniture, this setup is redundant and neglects some critical bench functions.

Rule No. 5: Overall Dimensions of a Bench Are Critical

Your bench design cannot be too heavy or too long. But its top can easily be too wide or too tall. I think your benchtop should be as long as possible. Find the wall where your workbench will go (hint: Pick the wall that has a window). Measure that space. Subtract four feet from that measurement and that's a good length for the top. Note: The benchtop must be at least 5' long unless you build only small-scale items. Furniture-sized parts typically range up to 48" long and you want to support these fully with a little room to spare.

I've made tops that are 8' long. My next bench will be a 10-footer, the maximum that will fit in my shop. It is difficult to make or imagine a workbench that is too long. The same goes for thickness. It is the thickness that allows the top to be that long. If you make the top really thick (4" or more), then it will offer unerring support and allow you to build your bench without any support system beneath. The top can perch on the legs and will not sag under its own weight.

The width is a different matter. You can have a bench that is too wide for a one-person shop. I've worked on benches that are 36" wide and they have downsides. For starters, if you park them against the wall you'll have to stretch to reach the tools hanging

A bit much. *Here's proof that odd workbench designs are nothing new. This Hammacher, Schlemmer & Co. bench from an old catalog is a study in tool storage. I've seen one of these in person and I can say this: I would not want to have to build anything using it.*

on the wall. If you assemble projects on your bench, you will find yourself dancing around it a lot more than you should.

But there's more. Cabinetwork is sized in standard chunks. These sizes come from the human body; they aren't arbitrary. A kitchen's base cabinet is generally 24" deep and 34½" high. This is important for a couple reasons. First: It means you don't really need a bench that's much more than 24" deep to build cabinets. With that 24" depth, you actually get some advantages, including the fact that you can clamp the cabinet to your bench from as many as three sides of your bench. That's dang handy. A deep bench allows you to clamp your cabinets to the bench on only two sides (with a couple exceptions). Here's the other thing to keep in mind: Kitchen cabinets are themselves a highly studied work surface. There's a good reason that kitchen cabinets are 24" deep. And it's the same reason you don't want your workbench much deeper either.

Now I'm not going to argue with you if you build really big stuff or have a bench that you share with another woodworker facing you; you might need more depth. But if you are like the rest of us, a 24"-deep bench is a powerful and right-sized tool.

On the issue of workbench height: Many bench builders worry about it and there are a wide variety of rules and advice. The bottom line is the bench must fit you and your work. And in the end, there are no hard-and-fast rules. I wish there were. Some people like low benches; some like them high.

So consider the following as a good place to start. After taking in my crackpot theories, your next stop should be a friend's house or a woodworking supply store to use their benches and get a feel for what is right (it could be as simple as having a bad back that requires you to have a high bench, or a love for wooden handplanes that dictates a low bench).

Right height. *Here is how high my workbench is compared to my hand, which is hanging loosely by my side. I use hand and power tools in my work, and I've found this height is ideal.*

Here is my experience with bench height: I started with a bench that was 36" high, which seemed right for someone who is 6' 3⅝" tall. And for machine woodworking I was right. The high bench brought the work close to my eyes. I loved it. And then my passion for handwork reared its ugly head.

A long way down. *This early 20th-century airplane factory had the right idea when it came to workbench length. With a long bench, you can work on one end and assemble at the other – no need for an assembly bench. Thus, a big bench actually saves floorspace.*

Face first. *Most benches are easy to set up to work on the faces of boards or assemblies. In this example, a door is clamped between dogs. You can even work simpler and plane against a planing stop.*

If you get into hand tools, a high bench becomes less attractive. I started with a jack plane and a few smoothing planes. They worked OK with a high bench, but I became fatigued quickly.

After reading the screed on bench heights, I lowered the height of my 36" bench. It seemed radical, but one day I got the nerve up and sawed 2" off the legs. Those two inches changed my attitude toward planing.

The 34"-bench height allowed me to use my long leg muscles to propel the plane forward instead of my arms.

Now, before you build your next bench at 34" high, stop for a minute. That might not be right for you. Do you use wooden stock planes? If so, you need to consider that the wooden body planes can hold your arms about 3" to 4" higher off the workbench than a metal plane can. As a result, a wooden plane user's workbench should be lower.

This is as good reason as ever to get to know someone who has a good shop you can visit and discuss your ideas with. It is better not to make this decision on paper alone.

But there are other factors you must consider when settling on the bench's height. How tall are you? If you are over 6' tall, you should scale your bench a bit higher. Start high and cut it down if it's too high. And prop it up on some blocks of wood if it's too low. Experiment. It's not a highboy; it's a workbench.

Here are other things to consider:

Upended. *Working on the ends of boards – especially wide boards – can be a challenge for face vises. Adding a clamp to the setup stabilizes the work for sawing or whatever.*

Do you work with machinery? If so, a bench that's 34" from the floor – or a bit lower – can be good. The top of a table saw is typically 34" from the floor, so a workbench could be (at most) a great outfeed table or (at least) not in the way of your crosscutting and ripping.

Of course, everyone wants a ballpark idea for where to start. So here it is: Stand up straight and drop your arms against your sides in a relaxed manner. Measure from the floor to the place where your pinky joins your hand. That has been the sweet spot for me.

Rule No. 6: Benches Must Hold the Work in Three Ways

All benches should be able to grip the wood so you can easily work on the faces, the ends and the edges. Many commercial benches fail on this point.

Submit your bench to what I call the Kitchen Cabinet Door Test. Imagine a typical kitchen door that is ¾" thick, 15" wide and 23" long. How would you affix that door flat on your bench to level its joints and then sand (or plane) it flat? How would you clamp the door so you could work on the ends to trim the top rail and tops of the stiles so the door will fit its opening? And how will you secure that door on edge so you can rout its hinge mortise and plane off the saw-blade marks without the door flopping around? Does your bench pass this test? OK, now ask the same questions with a door that is ¾" x 15" x 38". And then try a board that is ¾" x 12" x 6'.

Classic simplicity. *This primitive bench still allows you to work on long edges of boards. The crochet (or hook) grips the board. Hold-fasts and a scrap support from below.*

How you accomplish each of these three functions is up to you and your taste and budget. To work on the faces of boards, you can use a planing stop, a grippy sanding pad, a tail vise with dogs, clamps or hold-downs.

To work on the ends of boards, you can choose a shoulder vise (especially for dovetailing), a metal quick-release

Barren surface. *Here's another historical bench that shows some difficulties. The drawers will interfere with clamping things down to the bench. With no dogs or tail vise, this bench could be frustrating to work on.*

Simple finishing. *An oil-varnish blend (any brand) is an ideal finish for a workbench. It resists stains, doesn't build up a film and is easy to apply. Two coats are all I ever use.*

Going mobile. *You do need to be able to pull your bench away from the wall on occasion. When I'm assembling cabinets, I clamp them to the benchtop so I'm able to get around the bench. The same goes when I'm routing. Note how I'm harnessing the window light.*

vise, a leg vise or a twin-screw vise. And you can use all of these in conjunction with a clamp across your bench. The vise holds one corner of the work; the clamp holds the other corner.

Working the long edges of boards is tricky with most benches. In fact, most benches make it difficult to work the edges of long boards, doors or face frames. There are a couple ways to solve this. Older benches had the front edge of the benchtop flush with the front of the legs and stretchers so you could clamp your frames and long boards to the legs. And the older benches also would have a sliding deadman (sometimes called a board jack). It would slide back and forth and had an adjustable peg to support the work from below. Another old form of bench, an English design, had a wide front apron that came down from the top that was bored with holes for a peg to support long work.

Rule No. 7: Make Your Bench Friendly to Clamps

Your bench is a three-dimensional clamping surface. Anything that interferes with clamping work to your benchtop (aprons, a drawer bank, doors, supports etc.) can make some operations a challenge.

We had a phase at *Popular Woodworking* where we tried to design a cupholder into every project. It started innocently with a deck chair. Who doesn't want a cool beverage at hand? Then there was the dartboard. What goes better with darts than beer? I think we came to our senses when designing a series of cupholders into a Gustav Stickley Morris chair reproduction. Do you really need a Big Gulp-sized hole in your Morris chair? I didn't think so.

The point of this story is to illustrate a trend in workbench design that I personally find troubling. It's a knee-jerk reaction to a common American complaint: We don't think we have enough space in our shops to store our tools and accessories. And how do we solve this problem with our workbenches? By designing them like kitchen cabinets with a countertop work surface.

This design approach gives us lots of drawers below the benchtop, which is great for storing the things you reach for every day. It also can make your bench a pain in the hiney to use for many common operations, such as clamping things to your bench.

Filling up the space below the benchtop also prohibits you from using any type of holdfast or holddown that I'm aware of.

Bench with a view. *With your workbench against the wall, you have the wall and the mass of your bench holding things steady as you saw your workpieces. You also can keep your tools at arm's length. And, the windows cast a useful light on your workbench.*

If you build drawers below the top, how will you clamp objects to the benchtop to work with them? Typically, the banks of drawers below the benchtop prohibit a typical F-style clamp from sneaking in there and lending a hand with the setup. So you can't use a typical clamp to affix a router template to the bench. There are ways around these problems (a tail vise comes to mind) but the tail vise can be a challenge to install, set and use.

You can try to cheat (as I have) and install the drawer bank so there is a substantial space underneath the benchtop for holdfasts and clamps. Or you can give your bench a large overhang to allow clamping (as some Shaker-style workbenches did) but then you have to start engineering a way to hold long boards and assemblies on edge.

Rule No. 8: There are Good Rules for Placing the Vises on Your Bench

Place your vises so they work with your tools. Vises confuse many workbench builders. They're bewildering if you've never spent much time working at a bench to develop a taste for the peccadilloes of all the idiosyncratic forms. There are a lot of weird configurations in the world, from a table with no vises to the bench with a vise on every corner.

Classic workbenches have some sort of vise at the front left corner of the bench. This is called the face vise. Why is it at the left? When we work with hand tools, especially planes, right-handers work from right to left. So having the vise at the left end of the bench is handy because you will always be planing into the vise that is gripping your work, and the work can be braced against the screws of the vise. So if you are a lefty, placing your vise on the front right corner makes sense.

So with that left corner occupied by a vise, where are you going to put the a second vise that is designed to grip boards so you can work on their faces? (The classic vise for this is a tail vise.) Well the right side of the bench is free (for right-handers) and there is no disadvantage to placing it there, so that's where it generally goes.

Messing with this arrangement can be trouble. I've seen face vises on the right corner of the bench of people who are right-handed. They said they liked it better for crosscutting with a handsaw. But when and if you start handplaning, that vise will be in the way because it won't be ideal for gripping long stock. It will be holding the tail end of the board and the plane will be trying to pull it out of the vise.

Rule No. 9: No Fancy Finishes

When finishing a workbench, less is more. A shiny film finish allows your work to scoot all over the bench. And a film finish will crack when struck by a hammer or dead-blow mallet. Choose a finish that is easy to apply, offers some protection and doesn't build up a thick film. I like an oil/varnish blend (sold as Danish Oil), or just boiled linseed oil.

Rule No. 10: Get a Window Seat

Try to place your bench against a wall and under a window, especially if you use hand tools. The wall braces the workbench as you are planing cross-grain and sawing. The light from the window points out the flaws in the work that your hand tools are trying to remove. (When I work with hand tools, I turn the overhead lights off. I can see much better with fewer light sources.)

For machine work, I find that placing the bench by a window helps with some operations, though not all. When power sanding, for example, the raking window light points out scratches bet-

ter than overhead fluorescents.

In general, when working with power tools, I tend to pull my workbench away from the wall so I can work on all sides of it. When working with routers, you sometimes have to work with odd clamping setups so that you can rout around a template. So having access to all four sides of the bench is handy. Power tool setups thrive on overhead light – and lots of it. So being by the window is nice, but not as necessary.

How to Fix a Current Bench

You don't have to build or buy a new workbench if you're frustrated with the one you have. There are ways to improve your bench so it will be more useful. Here are some strategies.

Problem No. 1

My bench is too lightweight.

Add weight by building a tray below the bench and fill it with sand. Or rebuild your bench base with massive components and joints. You also can build drawers near the floor (so they don't impede clamping things to the top). That adds weight and storage.

Problem No. 2

My bench sways and vibrates when I work, making my saw cuts and attempts at planing into a & mess.

Your problem is most likely in the base of the bench. Commercial benches can be too spindly for woodworking. Rebuild the base from massive components and better joints. If you can't do that, stiffen the bench by running all-thread rod through the legs and cinching the base tight with nuts.

Problem No. 3

I want a new bench, but I'm low on funds.

Build your bench using Southern yellow pine or fir, both of which are stiff, plentiful and cheap (you can build a bench of your dreams for less than $300, easy). You will have to pick your lumber with care and let it reach equilibrium with your shop. But in the end, you'll have a great bench.

Problem No. 4

I think I want a fancy twin-screw vise, Emmert patternmaker's vise or tail vise on my bench. Plus something for working metal.

Before you drop serious coin on vises and put them on every corner, start with a simple face vise. Then buy a tail vise. Then decide after a year of working on the bench if you need the fancier vises. The answer might be yes. You also might forget that you ever wanted those vises.

Problem No. 5

My bench is too short in length, too wide, narrow, high or low.

If your bench is too short in length you should probably build a new top. Keep the base if you can. If it's too wide, rip it down (removing a tool tray will help). You might need to cut the base a bit narrower as well. This is doable:

Cut the stretchers on the sides shorter and then cut tenons on their ends. Cut new mortises on the legs and assemble it. If your bench is too narrow, scab on new material at the back, which will add mass as well. If your bench is too high, cut down the legs or the sled foot. If it's too low, build a sled foot to raise it.

Problem No. 6

My bench makes it difficult to work on the long edges of boards.

First, detach the benchtop from its base and reattach it so the legs are flush with the front edge of the benchtop. If your bench has a sled foot or a trestle design, there is an easier fix. Scab on extra pieces to the legs to bring them flush with the front of the benchtop. Now build a sliding deadman or a bench slave and you'll be in business.

Problem No. 7

My bench looks like a kitchen counter with drawers below. Clamping to the bench is a problem.

You might be stuck here. Some commercial designs allow you to remove the drawer bank (they sell them separately) and you can install it someplace else handy, such as under a table saw's wing. If your bench is a door on top of base cabinets, consider making a new base and use that cabinet as a cabinet.

Problem No. 8

My commercial bench came with a face vise and tail vise. Both rack horribly. How do I improve them?

By throwing them in the fireplace and installing a real face vise on the front and tail vise on the end.

Problem No. 9

My workbench has a lacquer finish that looks nasty and lets the work slide everywhere.

Flatten the top of your workbench and then refinish the top with an oil/varnish blend.

Problem No. 10

I like my bench in the middle of the room so I can work on all sides.

Perhaps you do. Try putting it under a window and against the wall and work that way for a few months. Don't have a window? Directional compact florescent fixtures can help. Or you can save your pennies and have a window installed. I did. It was the best $1,000 I've ever spent on my shop.

Most workbench books begin with a grand statement about how the workbench is the most useful tool in the shop. I'm not so sure I agree with that statement as it stands. I think it's correct to say that a well-designed, solidly built and properly outfitted bench is the most useful tool in the workshop. Anything less is only making you struggle. **PWM**

Adapted from "Workbenches: From Design & Theory to Construction & Use" by Christopher Schwarz (available at shopwoodworking.com).

ONLINE EXTRAS

For links to all online extras, go to:

- **popularwoodworking.com/dec16**

BLOG: *Read the author's blog and see more of his work.*

BLOG: *Get a behind-the-scenes look at the author's work at the Smithsonian Institution.*

IN OUR STORE: *"Creating Historic Furniture Finishes," by Don Williams.*

IN OUR STORE: *"Simple Parquetry Techniques," by Don Williams.*

Our products are available online at:

- **ShopWoodworking.com**

Traditional Sawbench

BY CHRISTOPHER SCHWARZ

Plastic sawhorses are OK in a pinch. However, once you build a sawbench you will wonder how you ever worked wood without it.

Sawbenches are not sawhorses. Though both devices support your work, real sawbenches can be pressed to do so much more that they are worth building in a long afternoon in the shop.

The major difference between a sawbench and a sawhorse is the top. On a sawhorse, the top is generally long and skinny. It will not support anything on its own. A sawbench has a wide top: 7" is a common and useful width. And it's this detail alone that makes them worth building. The wide top allows you to cut many cabinet-sized parts using one sawbench alone. The top is also an excellent clamping surface, allowing you to secure work to it. The sawbench is a step stool for reaching up high. It's a mortising stool for hand-mortising operations – you secure the work over a leg and hold it down with a holdfast (hence the hole in the top). And then you sit on the sawbench astride or next to your work.

Versatile & sturdy. *The reason sawbenches are so useful is the top. The fact that it is flat and has some width allows you to perform many operations on it. And the particular height of the sawbench unleashes the full effectiveness of full-size Western-style handsaws and panel saws.*

But, as they say on television, there's more. Much more. The shelf below holds your square and saw as you move your stock in position. The V-shaped mouth on the top – called a "ripping notch" – supports your work as you notch out corners with a handsaw or jigsaw. And the top is the traditional place for a craftsman to sit when eating lunch.

The sawbench shown here is based entirely on traditional English forms. If you choose to alter this plan, resist changing the height of the sawbench. The 20" height is key to using the bench in conjunction with a Western handsaw. The 20" height allows you to use your legs to secure your work without clamps and makes the handsaw work efficiently. The sawbench is high enough that a 26"-long saw at the proper cutting angle won't hit the floor and the saw won't be able to jump out of its kerf on the return stroke.

Build your sawbench out of any material that is plentiful, inexpensive and easy to work. The legs and lower braces are assembled much like the American Trestle Table in this issue: Create the through-mortise by cutting away the material before gluing the two pieces together that form each leg. If you like, chamfer all the edges of your components with a block plane or chamfer bit in a router.

Cut the ends of the legs at 10°, then cut a notch at the top of each leg that will allow it to nest into notches in the top piece. Each leg notch measures $\frac{1}{2}$" x $2\frac{1}{2}$" x $1\frac{1}{4}$". Cut your tenons on the lower braces then assemble the braces and legs. Drawbore the joints then wedge them using hardwood wedges and glue.

With the legs and braces assembled, clamp them temporarily to the top and mark precisely where they intersect the edges of the top. Take the clamps off and mark out the $1\frac{1}{2}$" x $2\frac{1}{2}$" notches in the top that will receive the legs. Saw out the notches and cut the ripping notch. Glue the leg assemblies to the top and

PHOTO BY AL PARRISH

Traditional Sawbench

NO.	ITEM	DIMENSIONS (INCHES) T	W	L	MATERIAL	COMMENTS
❑ 1	Top	1¼	7	32	Pine	
❑ 4	Legs	2½	2½	21	Pine	Includes extra length for trimming
❑ 2	Lower braces	1¼	2½	26¼	Pine	2⅝"-long tenon, both ends
❑ 2	Shelf braces	¾	⅝	21	Pine	10° bevel on one long edge
❑ 8	Shelf pieces	1¼	2½	9¼	Pine	10° bevel on both ends, cut to fit
❑ 2	Top braces	¾	5	9½	Plywood	10° angle on edges, cut to fit

reinforce the joint with a ½"-diameter dowel or Miller Dowel.

Clamp the plywood top braces in place and trace the angle of the legs on the braces. Unclamp the braces and saw each one to shape. Glue and screw the braces to the legs using three #8 x 2" wood screws in each leg. If you want to add a shelf, first rip a 10° bevel on the shelf braces and cut the ends of the shelf pieces at 10°. With the sawbench upside down on your bench, place the shelf pieces against the lower braces. Now glue the shelf braces against the shelf pieces and nail everything in place.

Bore a ¾"-diameter hole in the top for a holdfast or holddown. Position the hole so the pad of the holdfast will touch the tops of the legs. Mine is positioned to accommodate the Veritas hold-down. **PWM**

Christopher Schwarz is the editor of Lost Art Press and the author of "The Anarchist's Tool Chest" and "The Anarchist's Design Book."

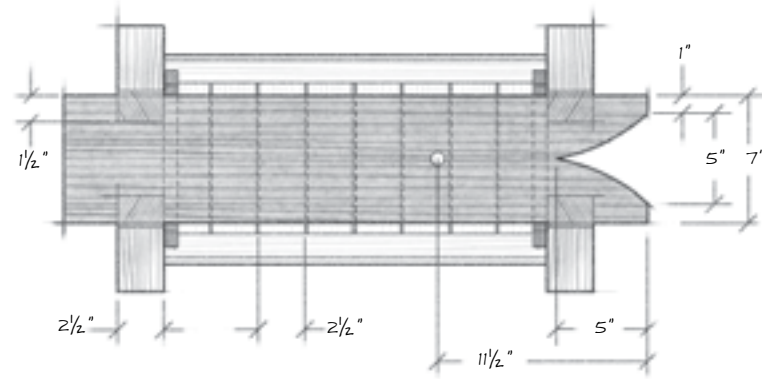

TOP VIEW

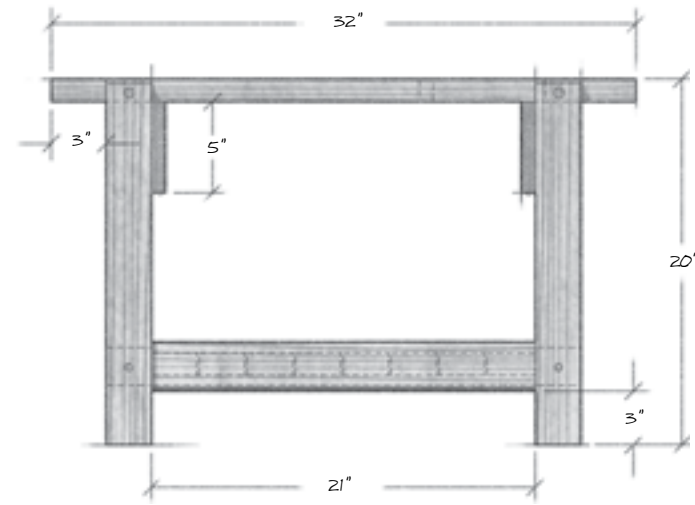

FRONT VIEW

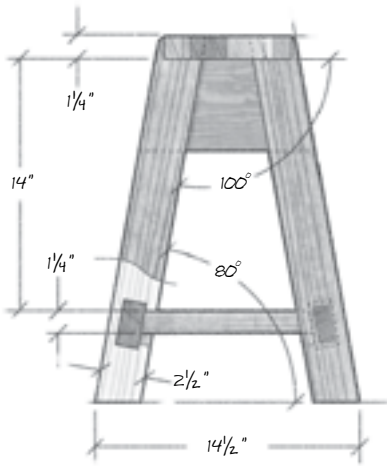

END VIEW

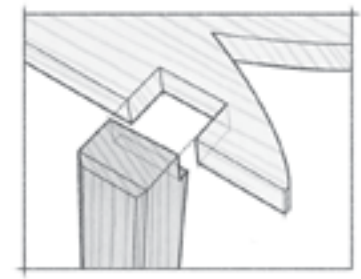

LEG JOINT DETAIL

Give Me a Brake

BY PETER FOLLANSBEE

Get some splitting leverage with this simple contraption.

Reach for a froe, and you should immediately think, "Give me a brake." The brake can be a constructed work-holding device, or just a couple of logs. Its function is to trap your workpiece in such a way that you can exert leverage on a section of a log as it's splitting. The froe – used to split a piece when it's in a brake – is a tool that requires some nuance to really get the most from it; the brake helps make that happen.

There are many kinds and configurations of brakes. The first one I learned is just a forked section of a tree, propped up with crossed timbers underneath.

Jam your billet into the fork with its other end on the ground, and drive the froe into the top end. As you twist the froe handle, you're pulling against the thicker part of the split. Depending on many factors, you might need to flip your workpiece this way and that to get the thick side of the split on the bottom, or near, side.

Sophisticated. *The tripod riving brake shown here is the sophisticated version of a contraption to help hold logs and billets as they're split with a froe.*

In a pinch. *A log and a split section of wood can serve as a brake if need be.*

In a pinch, I have improvised a brake with a log and a section of split oak; it's a bit awkward, but it works. In both of these cases, the workpiece is pretty close to vertical.

Many years ago, I learned of a different brake: a large tripod with two cross bars fixed to its two front legs. My latest version is about 6½' tall, and bolted together at the top. The legs are softwood 4x4s; the crossbars are oak 2x6s. The rear leg swings out between the two front legs.

Across the front legs I have variously nailed or lag-bolted two crosspieces. One is horizontal, about waist high. The other is above this rail, angled upward toward the left-hand end of things. The idea is that these two rails create a tapered fork into which you can jam your riving stock.

Another feature is that this upper rail is attached to the front face of my right-hand piece, and behind the other leg. This provides a broader range of points at which to pinch a workpiece. I often add another rail running from the left-hand front leg to the back leg, as shown above. I use this one to grab long whippy pieces between the front lower rail and the back end of this side rail.

I prefer this contraption to a forked-tree riving brake because it puts the workpiece you're riving parallel to the ground. This way, the pressure you're exerting to control the split is directly downward, not up in the air like on the

Forked. *Here, a student is using a forked-tree brake as he rives oak with a froe.*

PHOTOS BY THE AUTHOR

Oak hurdle. *Here's my a hurdle – a traditional portable fence – based on an English regional style (you've likely also seen woven willow hurdles). No matter the style, the use is the same: to keep things in or out.*

first brake I used (or on the log version).

The riving I do for joiner's work is pretty simple, all that stock is fairly thick; 1"-1½"at least.

Oak 'Hurdles'

Recently I was making some garden hurdles, and for those the stuff I want to rive is often quite thin, sometimes only ½" thick. It takes finesse to get a split like that, but with good stock, a sturdy riving brake and some practice, you can split lengths up to 6' with ease.

Having the front rails in different planes helps when coercing a split that threatens to go astray. The offset between the rails means the pressure points are now spread out; the stock rests on the lower bar near you, but is pinched under the upper bar now about 4"-6" farther back.

This is helpful when you're directing the froe's action by leaning on the heavier side of the split. You can bend the stock and force the split back on track if it wanders. Longer stock achieves the same by being trapped on top of the front lower rail and under the side rail.

When riving long stock, the action is not a quick jerk of the froe, but a gentle and slight levering of the handle. The sound is not the tearing of fibers like splitting with wedges, but a "tic-tic-tic" as each push on the handle advances the split a ways.

Watch as you go, if the split "runs out" toward a thinner side, flip the stock over so the thick half of the split is down, and lean on the top as you push the now-thicker side down. Lever the handle – "tic-tic-tic" – and you're back on track. Easy does it.

The hurdles are simple: three uprights, several rails and a couple braces. Bore holes in the uprights, and use a chisel to chop between them to make the mortises. Hew or use a drawknife to fit the rails. All the joints and the braces are nailed or pegged in place.

Keep your hurdles light; these originally served as portable enclosures for sheep. I have no sheep here in my in-town yard, so I use a couple of hurdles to keep our kids from careening into the river when sledding in the winter. **PWM**

Peter has been involved in traditional craft since 1980. Read his blog at pfollansbee.wordpress.com.

Rails. *Use a hatchet or drawknife to shape the rails and fit the through-tenons (which needn't be tight), then peg or nail the braces in place.*

Bore & chop. *Lay out your mortise locations, bore a hole at either end, then chop the waste between.*

ONLINE EXTRAS

For links to all online extras, go to:

- **popularwoodworking.com/apr16**

BLOG: *Read Peter Follansbee's blog.*

ARTICLE: *"The Best Oak Money Can't Buy."*

About this Column

"Arts & Mysteries" refers to the contract between an apprentice and master – the 18th-century master was contractually obligated to teach apprentices trade secrets of a given craft (and the apprentice was expected to preserve those "mysteries").

Our products are available online at:

- **ShopWoodworking.com**

Period Clamping Techniques

BY BOB ROZAIESKI

Did traditional workholding involve fewer gadgets?

In my fledgling years as a woodworker, I had a large collection of clamps. I literally bought in to the belief that you could never have too many clamps. I had pipe clamps all the way up to giant 5 footers. I had multiple F-style clamps, boxes of spring clamps and about a dozen wooden handscrews (with metal screws).

Several years ago, I reassessed my clamping needs, wanting to free up as much space as possible. To do so, I looked to period shops and inventories for guidance. I wondered how early shops handled the tasks that we do today – tasks that seem to require so many clamps.

Clamps & Period Practices

There is historical evidence that clamps made of iron and/or wood have been used since at least the 17th century (I haven't researched the topic any farther back than that). Several period texts and paintings depict some kind of clamp. It is unlikely, however, that clamps as we know them were as heavily relied upon for assembly as they are in today's modern shops.

Traditional joinery, such as dovetails and drawbored and/or wedged mortise-and-tenon joints, assembled with traditional hide glue don't require the use of clamps for assembly. In fact, drawbored and/or wedged mortise-and-tenon joints can actually be assembled without glue (and frequently were in 17th-century joined work) and will stay together indefinitely. The mechanical connection of these joints imparts the primary strength. Glue is a secondary measure.

No clamps required. *I assembled these two sample joints without glue several years ago. They're still just as tight as the day they were cut.*

Modern joinery methods, such as biscuits, dowels and cope-and-stick joinery, have no such mechanical advantage. These joints rely on the glue alone to hold things together, and need clamp pressure to keep wood-to-wood contact until the glue cures. Further, if the glue degrades, these joints will fail as a result.

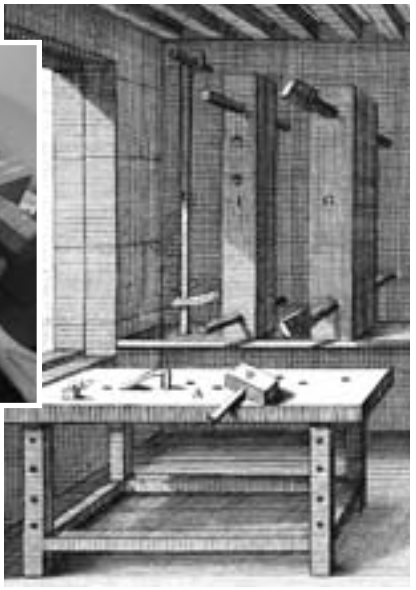

Félibien had it first. *The "Moxon" vise (first shown in André Félbien's "Principes de l'artchitecture..." is a form of handscrew clamp with the screws on the same side. The later-style handscrew has the screws coming through the jaws from opposite sides.*

PHOTOS BY THE AUTHOR

Benchless holdfast. *The mechanics of these iron bar clamps are similar to those of a holdfast.*

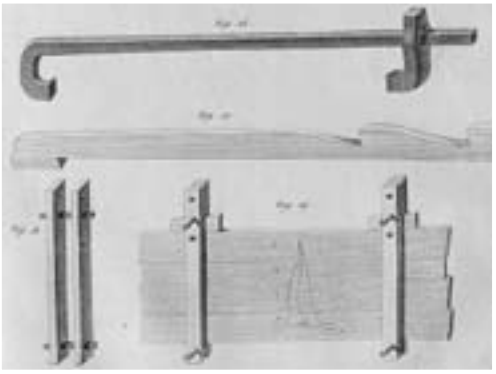

Give it a wedgie. *Wedge-style panel clamps (shown here from André Roubo's "L'Art du Menuisier" and in my shop) are such a simple design. Who needs expensive commercial clamps?*

Types of Period Clamps

One of the more useful jobs of period clamps was holding stock while it was being worked. Wooden handscrews were one of the more common types of clamps used for this task. Some period handscrews are very similar to a modern handscrew. In the wooden screw version, however, both holes in one jaw are threaded while the holes in the other jaw are oversized (the front screw pulls; the rear screw pushes). Modern metal handscrews use more complicated screws with threads that reverse direction half way down the shaft, and special left and right hand threaded nuts.

Handscrew clamps are fantastic workholding devices. Their design makes them capable of exerting enormous pressure. The jaws may be angled toward each other so they do a good job of holding tapered stock, too. By sawing a notch in the jaws, they can be used to hold round work. They can also be secured in a bench vise for holding awkward parts for shaping or carving.

Another common period use for clamps was to secure multiple boards in a wide panel while the glue dried. The simplest of these clamps was the iron staple or pinch dog, which is simply driven into the end of adjacent boards.

André Félibien and André Roubo both pictured another type of iron clamp in their books. These iron clamps are secured with a blow from a mallet and hold tight as a result of the flex and offset of the iron bar in the slightly oversized hole of the movable jaw. I bought a pair of reproduction clamps from Stephen Shepherd and blacksmith Mark Schramm and they work surprisingly well. They're particularly good for tasks such as holding a frame together while transferring drawbore locations to the tenons.

Félibien and Roubo also show a wooden panel clamp. It's nothing more than two boards connected by a couple of pins. The pins can be moved to one of several holes, depending upon the width of the panel. Pressure is applied by driving two opposing wedges between one pin and the edge of the panel.

I've also seen examples of a more complex wooden panel clamp in a painting of an early 1800s English joiner's shop, and the shops at Colonial Williamsburg have a few reproductions. There's a heavy wooden bar, with notches along its backside. A movable jaw is positioned by an iron loop that seats into the notches. At the fixed end is a wooden screw that applies pressure to the edge of the panel. The design is similar to modern pipe and bar clamps.

Colonial pipe clamp. *These wooden bar clamps would be right at home in most shops today.*

I've tried all of these period-style clamps, and they work every bit as well as commercial clamps. I'm not sure that they have any significant advantages over modern clamps. The real lesson I learned by dumping all of my modern clamps and working with just a few period versions is that I really don't need clamps in as many situations as I once thought. Maybe you actually can have too many clamps. **PWM**

Read Bob's hand-tool blog and see a schedule of his classes at brfinewoodworking.com.

ONLINE EXTRAS

For links to all online extras, go to:
- **popularwoodworking.com/apr14**

BLOG: *Read Bob Rozaieski's blog.*

IN OUR STORE: *"With Saw, Plane and Chisel," a book by Zachary Dillinger on hand-tool-only construction of classic American furniture.*

IN OUR STORE: *"Mastering Hand Tools," a full hand tool survey by Christopher Schwarz. Available as a DVD or digital download.*

IN OUR STORE: *"The Arts & Mysteries of Hand Tools" on CD.*

IN OUR STORE: *"Woodwright's Shop Season 33." Follow along in the newest season of Roy Underhill's classic show on traditional technique and hand tool.*

Our products are available online at:
- **ShopWoodworking.com**

Making & Using Sawhorses

BY ADAM CHERUBINI

Start with a log and do it 18th-century style – entirely by hand.

As odd as it may sound with all our modern technology and magazine articles like this one, learning to work wood by hand is harder today than it has ever been. People I know who work by hand will often say, "I'm not doing anything new; it's all been done before." But that isn't true. Never before have beginning woodworkers had such high expectations and so little training. The masters of the 18th century developed their skills as apprentices in commercial shops where all the tools were sharp. I think making sawhorses is a great place to start developing your skills.

Selecting & Splitting a Log

You don't need a perfect veneer-quality log to make a sawhorse (or a shave horse for that matter). You'll need something at least 30" long. Choose a strong local species, but don't be afraid to try something unfamiliar. Trying to work with different species is an important part of your education.

Splitting a Log

Splitting a log into pieces is relatively simple. I prefer to start by removing a section of bark along the length of the log where the split will run. Bark can conceal your work.

The first wedge is placed in the sap wood on a ray, (pointing toward the heart. When that crack hits the pith, it may jump to any other ray, leaving you with uneven sections of log. So I tap the first wedge in lightly, then, depending on the size of the log, either set another wedge opposite the first (for smaller logs), rolling the log in the process, or pop a wedge into the end grain a little below the pith (for big logs). A long crack connecting the two wedges may not yet appear. That's fine. A few more firm taps on the first wedge will produce a crack in the sapwood, running lengthwise down the log. Set a wedge just at the end of the crack in the sapwood made by the first wedge.

Now hit all three and see if you can't get a good crack going. Once that crack develops you can lengthen it by adding additional wedges or gluts (wooden wedges) or simply playing leapfrog with your wedges. Don't try to correct a spiraling crack. That's the way the tree grew.

You'll have to sever fibers in the crack with a hatchet. Be careful not to stick your hand in the crack and try not to hit any metal wedges with your hatchet. This operation is one reason wooden gluts are nice to work with.

Continue to split in halves until you are left with a pie-shaped piece that will be approximately 2" thick at the small end and 6" or so inches wide with the sapwood removed for the top of the saw horse. Try to split 2" x 2"s for the legs and try not to use sapwood for them. Now you are ready to build sawhorses. **PWM**

Adam is a former Arts & Mysteries columnist. You can read much of his writing on our website at popularwoodworking.com/author/adam-cherubini.

PHOTOS BY THE AUTHOR

Buck up. *Begin by bucking your splits into sawhorse lengths and leg lengths. Then, flatten one side of the stock. I used my Grandfather's ship adze, but you could use a plane or hew it with your broad hatchet.*

Work carefully. *I'm using the technique Roy Underhill has discussed – chopping right under the sole of my shoe. I don't do this often enough to be confident, so I proceed with caution. I find the adze to be both rewarding and frightening to use. It's an exhilarating experience – the 18th-century version of bungee jumping.*

Ready for hewing. *The finished board is now amazingly smooth and flat. The white sapwood is clearly distinct from the heartwood and must go. I'll hew it away with my trusty broad hatchet after I'm done flattening the heart side.*

Measure up. *Because of the wide stance or splay, these pieces are the right length for the legs of a knee-high sawhorse (note my accurate knee-high measuring device). Splitting in halves gives nice, even-ssized pieces.*

By eye. *With the stock prepared, it's time to attach the legs. I'm boring a 1¼" hole, but anything in this neighborhood would work. I eyeball the first hole, then stick a leg in it. Matching the angle of the next hole to the previous leg is pretty easy with this long ship auger. But don't worry if the leg angles vary.*

Rough shape. *I use my hatchet to rough shape the leg tenons. The fit is perfected with a drawknife. Drawknives are difficult to use without a shave-horse but not impossible.*

Wooden protection. *I'm using scrap wood for a sort of bib while holding the stock with my legs. If you weren't convinced that you needed a shave horse before this project, you will be by the time you're finished.*

Prevention. *Chamfer the tops of the legs before inserting them to prevent break-out. I prefer to run the legs right through then saw them flush. In time, these legs will shrink and get loose. When that day comes, I'll beat them in a little deeper and maybe wedge them. I see no reason to wedge them now though.*

Level up. *I've moved to the flat floor of my shop to saw the legs and level the horses. With the horse inverted (the protruding tops have been sawn flush already) I measure up from the floor. You'll need a 3'-Starrett machinist's straightedge for this, but I left mine in my other breeches, so I'm using a walnut stick instead. I'll transfer a mark to each corner of each leg and connect the dots with a pencil. Sawing the legs off is easier if you have a helper to hold the legs steady. If the top of the horse isn't flat, it can rock and cause you to cut one leg wrong. To find the problem with your rocking horse, put it on its legs and check each corner of the top with your stick. Before you saw anything, try hitting the offending legs with a maul. With the horse stable, you can check the height above the floor and plane away any high spots. You can saw the ends square if you wish. You should chamfer the top edges and maybe plane the rough hewn edges smooth. I'm so proud of my adze work that I think I'll leave the tops as they are, with no finish. The next time I use linseed oil, I'll have the perfect place to spread out my oil-soaked rags. —AC*

I know you're not dying to learn about sawhorses. And I'd just as soon write about 18th-century carcase construction, or the use of the golden section in Philadelphia's early baroque furniture. But I think we're all better served by focusing on basic skills and developing a more intimate relationship with wood. I can't think of a better way to achieve those two goals than to make a useful set of sawhorses and use them to saw wood by hand.

The trick to using sawhorses is keeping the saw as close to a horse as possible. This allows your effort to go into cutting as opposed to bending the wood. You can also cut faster and more accurately when the stock is held securely.

The height of the sawhorses is important. I like a horse roughly the height of the top of my patella. This way, I'm not crouching in a sort of deep knee bend. In the "over-hand stroke" picture (below right), notice that both of my legs are pretty straight. Many woodworkers don't give much thought to such things. Then again, most woodworkers plug in their saws. The rip through this 4/4 pine took less than five minutes. But thick hardwoods take considerably longer. So it's good to have sawhorses that are made well and fit your body.

I don't move the horses when I'm sawing. And because I slide the stock across the horses, I prefer that my horses are heavy and stable.

The length of your sawhorse isn't critical, but I think it's a good idea to make your horse long enough to straddle and sit on the work when necessary (for example, when chopping mortises).

Long rip cuts. *When ripping long boards, I always place my sawhorses 4'-5' apart. I begin the cut with just a foot or so of the board overhanging the front horse. As the cut progresses, I push the board forward. Just before the board is ready to fall off the rear horse, I slide the board back and repeat the process at the rear horse.*

Body position. *I usually stand behind the horse, steadying the stock with knee or foot, especially when the sawing is going quickly. But if the stock is thick and hard, you can stand right in front of the rear horse.*

Finish up. *To finish the cut I either use an over-hand stroke as shown, or turn around and lay a new kerf in the uncut end.*

Short rip cuts. *Ripping short stock requires a horse with a broad top. For this reason, I prefer horses without aprons or lower stretchers. Sawing around the splayed legs isn't difficult. One might be tempted to eliminate the splay on one side of the horse. I've tried horses like this and don't care for them. As Ben Franklin once said, "The fool who sacrifices stability for ease in ripping short stock deserves neither." I think it was Ben Franklin. It may have been Shakespeare.*

Crosscuts. *I prefer to crosscut on the bench hook on my workbench. But when the offcut is long or heavy, it's best to use sawhorses. As you can see, both sides of the cut are supported by a sawhorse. In this instance, it's nice to have both sawhorses the exact same height. Kneel on the stock with your left leg (reverse if right-handed), and allow the stock to bump against your right leg. In this way, the stock is completely immobilized and secure. —AC*

A Workholding Renaissance

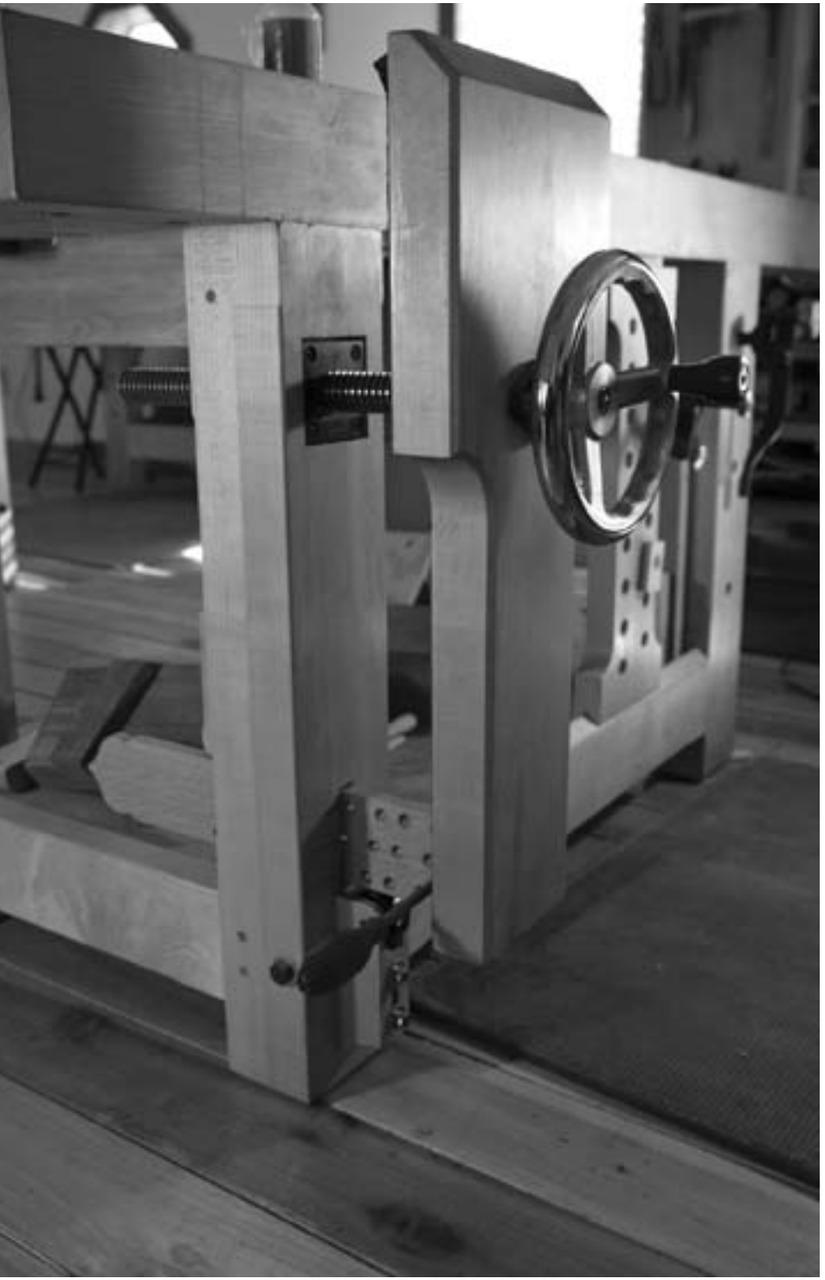

BY CHRISTOPHER SCHWARZ

After years of decline, the industry that makes vises and holdfasts for woodworkers has come roaring back.

In my first book, "Workbenches: From Design & Theory to Construction & Use" (Popular Woodworking Books), I urged fellow woodworkers to "fight progress" and "invent nothing" when it came to designing their workbenches.

Boy, am I glad that the tool manufacturers ignored me completely.

In the last decade there has been an incredible rebirth in the manufacturing of vises and workholding. We have gone from having almost no choices to having so many that it's agonizing. If you are trying to select the right vises and holdfasts for your new workbench – or you are considering upgrading your equipment – keep reading. We're going to pick apart the latest gear so you can choose what suits your work.

Veritas & Lee Valley Tools

It would be folly to begin this article without discussing Veritas and Lee Valley Tools. Even in the darkest hours of workbench hardware, this Canadian company continued to manufacture and sell quality workbench equipment.

Benchcrafted Glide. *Leg vises are versatile, but most of them require some effort to adjust. The Glide from Benchcrafted, however, is as smooth as silk.*

Veritas Quick-Release Sliding Tail Vise. *This is the first tail vise I ever installed that doesn't sag. Add to that the fact that it offers quick-release and is simple to install and you'll know why it's one of my favorites.*

Veritas Hold-Down. *Traditional holdfasts might cinch down faster, but no other hold-down offers a 100-percent predictable (and adjustable) grip. This is still one of Veritas's best tools.*

Not all of the company's products are home runs, but Veritas makes bench stuff for everyone, from joiners to carvers to people who specialize in bent laminations. Here, in my opinion, are the company's best bench products.

At the top of my list are the Veritas Quick-Release Front Vise and Quick-Release Sliding Tail Vise. These remarkable vises give you the Old World look of a vise with a wooden jaw, yet they give you the modern convenience of quick-release. And, perhaps best of all, these vises don't rack or sag.

If you own a commercial European bench, then you probably have been fighting sagging, racking vises almost the entire time. Racking face vises refuse to hold the work. Sagging tail vises lift it off your benchtop. These Veritas vises are easy to install – like a metal quick-release vise – and can be bolted so they will never droop.

Critics of these vises scoff at the small-diameter screw that these vises use. Don't buy into it. These vises take a beating and stay smooth after thousands of cycles.

The other big winner in the Veritas stable is the venerable Veritas Hold-Down. This is the only surface clamp that works regardless of how thick your benchtop is. These have been around for years. They are expensive but are worth every cent.

As I said earlier, not everything Veritas offers is an undisputed champion. The company has developed a lot of hardware for people who don't want to install a tail vise: the Veritas Wonder Dog, Surface Vise and Inset Vise. These bits of hardware will allow you to quickly add a tail-vise-like mechanism to your bench. The downside to these bits of hardware is they don't work well with thin stock. If you work with stuff that's ¾" thick or more, they're great. Otherwise, look elsewhere.

Benchcrafted

Another leader in the workholding revolution has been Benchcrafted, a small family business in Iowa. This company sells only a handful of vises, but every

SQUARE DOGS V. ROUND DOGS

Here are the real differences between square dogs and round dogs.

Round dogs holes are easier to install after the bench is built – just drill a hole. They can also accommodate holdfasts and a lot of aftermarket workbench equipment from Veritas. The downside? The jaws can rotate and slip when you are trying to grip curved work. Historical note: Round dogs are probably older than square dogs – you can see them in paintings from Pompeii.

Square dogs require more work to install. And it's a royal pain to try to put them in after the bench is built. However, their jaws never rotate, so they offer a more sure-fire grip with irregularly shaped pieces. — CS

No winner. *Both square and round dogs have advantages and disadvantages. Which you choose depends on your work – and your bench.*

ALL PHOTOS BY THE AUTHOR, EXCEPT FOR LIE-NIELSEN CHAIN-DRIVE (COURTESY OF LIE-NIELSEN) & CRISSCROSS (COURTESY OF BENCHCRAFTED)

one of them is a superb achievement of design and manufacturing.

What Benchcrafted does is take forms of vises that have disappeared and reinvent them with modern materials and high-tech manufacturing. The company's first vise, a tail vise, is actually a modern interpretation of the 19th-century wagon vise. This vise gives you more benchtop space to work than a traditional tail vise. And it is incredibly robust. I have one of the first ones on my workbench and it is still flawless.

Benchcrafted Tail Vise. *It doesn't look like much from the benchtop, but the engineering underneath this vise is impressive. I have this hardware on my bench and wouldn't trade it.*

Benchcrafted's second vise, the Glide (shown in the opening photo), takes the old leg-vise design and makes it almost frictionless. Your vise jaw floats on wheels and a bushing that keep it from sagging. And the large handwheel is less cumbersome than the traditional tommy bar.

And the company's third vise, the Moxon vise, updates a 17th-century design to make dovetailing much easier – no stooping. The vise raises your work about 8" off your benchtop and can be easily stowed away when not in use.

The company has other vises, including a carver's vise. And at press time, I'm installing the company's Crisscross accessory (below), which you can add to any leg vise to eliminate the parallel guide at the floor and banish a lot of stooping in your shop.

If there is any downside to the Benchcrafted products, I'd have to say that they aren't fun to install on an already-assembled workbench. If you are building a new workbench, then it's simple to plan for the precise cavities these vises require. If you are retrofitting a workbench, the Benchcrafted vises require a lot of finicky handwork on your part.

However, when your vises are installed, you won't care about the labor. These vises look good and work like crazy.

Benchcrafted Moxon-style vise. *I don't dovetail every day. But when I do, I use this vise, which raises my work to a comfortable height. When I'm done, the vise is put away.*

Benchcrafted Crisscross. *This apparatus replaces a leg vise's parallel guide and pin. It's an old idea that has been revived and improved by Benchcrafted.*

Gramercy Tools

Gramercy Tools, the tool-making label of Tools for Working Wood in Brooklyn, N.Y., made one of the biggest contributions to workholding with its patented holdfast. This wire-formed holdfast works as well as a blacksmith-made one but costs less than $39 – for a pair.

Thanks to that incredible price, these holdfasts have introduced many woodworkers to traditional benchwork. And I recommend them to almost every woodworker who is starting out.

Some people grouse about their modern appearance. I say you haven't hit them enough. After a few years of hard use they look right at home on a traditional bench. The only criticism I have of these holdfasts is they are not as effective in very thick (more than 4") benchtops. To make them grab in thick tops, I recommend you rough up the shaft with a file and then counterbore your holdfast's hole from the underside of your benchtop. This will reduce the effective thickness of your benchtop and fool the holdfast into working.

Gramercy Holdfast. *This wire-formed holdfast (foreground) is the least-expensive effective holdfast on the market.*

Lie-Nielsen Chain Drive Vise. *The chain is buried in the chop of this face vise, allowing a traditional look. The robust components allow you to grip your work with surprising force.*

Lie-Nielsen Holdfast. *The close-to-the-bench profile of this holdfast keeps it out of harm's when you are pushing your planes around the benchtop.*

Lie-Nielsen Toolworks

When Thomas Lie-Nielsen started making workbenches in his Maine factory he installed European vise hardware, which was the best he could get at the time. But it wasn't good enough. Some of the tail vises sagged. All the vises needed some tuning. And the fit and finish didn't please Lie-Nielsen. So he started making his own hardware.

Today Lie-Nielsen makes hardware for every corner of a workbench, including tail vises, face vises, leg vises and even a Moxon-style vise. The two big contributions the company has made to workholding have been its improved tail-vise hardware and its chain-drive mechanism for face vises and leg vises.

The tail vise hardware, which I've installed, is designed so it cannot sag. And indeed, the stuff I have installed has stayed in place for more than a year. It's a bit trickier to install than the Veritas Quick-Release Sliding Tail Vise, but the Lie-Nielsen hardware looks a lot more traditional – if that's important to you.

As to the chain-drive mechanism, I was skeptical of it at first. I owned a Veritas Twin-screw Vise with a chain drive for many years and sheared off its mounting bolts a couple times and I had to fuss with its guts quite a bit.

The Lie-Nielsen chain-drive vise works (literally) like a Sherman tank. After a couple of years of using it, I have yet to encounter a single hiccup. It is the same mechanism as on the company's Moxon vise and leg vise. On the leg vise, the chain mechanism eliminates the parallel guide, similar to the Benchcrafted Crisscross.

The latest bench accessory from Lie-Nielsen is its traditional holdfast. Made from ductile iron, the holdfast is flexible but indestructible. Thanks to its close manufacturing tolerances, it barely slides into a ¾" hole in your bench. But that's a good thing – the holdfast works in thick benchtops quite well. Also a bonus, the Lie-Nielsen holdfast has a lower profile than the Gramercy, which can be an advantage when planing stock – you are less likely to slam into it with a tool.

The Hovarter Vise

Michigan engineer Len Hovarter has invented a versatile workbench mechanism that resembles magic. Instead of using a vise-screw mechanism – like a traditional vise – the Hovarter uses an ingenious clutch mechanism.

The result is that you have a quick-release vise that tightens by turning the vise's handle a short distance. This mechanism can be used in leg vises, twin-screws or even wagon vises. I've used them all at shows and at Kelly Mehler's School of Woodworking.

Hovarter Single Handle Face Vise. *This Hovarter twin-screw opens and closes with a push or a pull. And it locks by twisting the handle clockwise a bit. It's a remarkable piece of engineering.*

Big Wood Vise wooden screw. *Wooden screws are fast and strong, and they don't mark your work with grease. Plus, I think they look like sculpture.*

Lake Erie Toolworks tommy bar. *Caps on tommy bars tend to come off – no matter how many screws or nails you drive through them. Lake Erie has fixed this problem with a screwed-on cap.*

They work brilliantly. Mehler likes his, though he says it needs occasional adjustment to work smoothly.

The hardware is beautifully made and looks especially good on a contemporary workbench. And the Hovarter is proof that there is still room for innovation in a centuries-old device.

Wooden Vise Screws

If you are true traditionalist (and welcome to the club), then you should investigate the companies that make wooden vise screws. These glorious triumphs of Archimedes work every bit as well as they did hundreds of years ago.

They are fast – usually faster than a metal-screw vise. The only thing faster is a quick-release mechanism. They don't require oil or grease for lubrication, which can mark your work. They look great. And they are strong.

As long as you don't allow a gorilla to use your bench, the screws are unlikely to ever crack. And if you do lose a few threads, you probably won't even notice the difference. I've used screws that looked like they shouldn't work, and they work just fine.

The wooden screw is a versatile mechanism. You can use it to make any sort of vise you can dream up. Yeah, they are a little expensive compared to metal screws, but I think their advantages are worth the difference.

Now there are three companies that make wooden vise screws: Lake Erie Toolworks, Acer-Ferrous Toolsworks (available through Red Rose Reproductions) and Evans Wood Screw. All three small family companies make excellent products. I personally prefer the Lake Erie screw. Its fit and finish are tops, but that's not the sole reason I love it. The two ends of the tommy bar are threaded onto the bar. That sounds minor, but if you have built and used as many workbenches as me, then you know that this is a weak point of almost every vise design. The ends come off and the tommy bar falls to the floor. Lake Erie is the only company that has conquered this frustration.

How to Choose

I end up counseling a lot of woodworkers about choosing their workholding, so here are three final words of advice on picking out vises for your bench: Keep it simple.

With so many choices out there, some woodworkers opt to put a vise on every corner of their workbenches. This is an expensive and time-consuming compromise that I don't recommend (unless you have two people working at one workbench).

So try this: Pick out one tail vise and one face vise and install those on your workbench. Take your time and do it right. Don't call it done until every screw is rock solid and the vise moves as smooth as silk. Cover the jaws of your vises with leather to increase their grip. And then work with those two vises for a year before you buy any more vises or declare defeat with your current set.

After a year of work you'll know the strengths and weaknesses of your vises and be able to compare them with others. But chances are you will forget to assess your vises because you'll be too busy building furniture at your bench, which was the goal in the first place. **PWM**

Christopher is the editor at Lost Art Press and the author of several books on woodworking.

SUPPLIES

Lee Valley Tools/Veritas
leevalley.com or 800-871-8158

Benchcrafted
benchcrafted.com

Tools for Working Wood/ Gramercy Tools
toolsforworkingwood.com or 800-426-4613

Lie-Nielsen Toolworks
lie-nielsen.com or 800-327-2520

Hovarter Custom Vise
hovartercustomvise.com or 810-545-6179

Red Rose Reproductions
redrosereproductions.com

Lake Erie Toolworks
lakeerietoolworks.com or 814-528-4337

Evans Wood Screw Co.
thetraditionalcarpenter.com or 317-560-3485

ONLINE EXTRAS

For links to all online extras, go to:
- **popularwoodworking.com/apr13**

BLOG: *Read "The Kitchen Test" for workbenches.*

BLOG: *Read eight years of articles (free) by the author on workbenches.*

WEB SITE: *Visit workbenchdesign.net for bench-building ideas.*

TO BUY: *"The Anarchist's Tool Chest," by Christopher Schwarz.*

IN OUR STORE: *"Workbenches: From Design & Theory to Construction & Use."*

Our products are available online at:
- **ShopWoodworking.com**

Moxon's Ingenious Bench Vise

BY CHRISTOPHER SCHWARZ

17th-century design saves your 21st-century back.

If you cut dovetails by hand, then I'm sure you're aware of the other part of your anatomy that is involved: your back.

Bending over rows of tails and pins all day is murder when you try to stand up straight. Several people have come up with solutions, including a cute mini-bench that you park on your full-size bench to raise your work. Other woodworkers have built benches with higher benchtops that are designed just for hand-joinery.

Of course, like most things in woodworking, someone had already come up with the solution several centuries ago.

Back to the future. *This vise might not have originally been intended for cutting dovetails, but boy is it great for it. It raises your work, then stows away when you don't need it.*

'Mechanick Exercises'

Joseph Moxon wrote the first English-language book on woodworking titled "The Mechanick Exercises" in1678. In it he showed many of the tools used by the contemporary joiner, from the workbench down to the dividers.

In one part of his book he discusses the "double-screw" vise. It looks like a twin-screw vise with two jaws that has been affixed to the front of a workbench.

But the text discusses how the vise can also be clamped down to the top of the workbench.

When that piece of information sunk in, I got excited and built a prototype. After a few revisions, here is what I came up with.

This vise solves a lot of problems that we joiners have. It allows you to hold stock of almost any size (mine holds up to 24$^{1}/_{8}$"-wide material) with an incredible grip. More so, it raises your work above your benchtop surface. The vise as shown is 6" high, so the top edge of the vise is 39" from the floor. The board I've clamped in the vise is 44" off the floor and is as stable as something clamped between two boulders. What does that mean?

No more stooping to saw dovetails, tenons or other joinery.

And because the vise is portable, that means I can:

1. Put the vise wherever I want on the bench – the end, the back edge, wherever.

2. Remove it when I don't need it and hang it on the wall – most woodworkers don't need a twin-screw vise every day.

3. Leave it unclamped on the benchtop, and use it like a giant handscrew clamp (joiner Peter Follansbee hipped

Tap then tap. *Place the front jaw on the rear jaw. Drop your Forstner in the hole. Tap it with a hammer. Then drill the hole in the rear jaw and tap that.*

PHOTOS BY THE AUTHOR

me to this function).

The vise is quite easy to build – I used some scraps. The only other key piece of shop equipment is an 1½" wooden thread box and tap, which is available at many suppliers for less than $50.

Tap the Jaws

The first step is to cut the 1½"-diameter clearance holes in the front jaw. Position the holes so you'll have 24⅛" between them. Then center the front jaw on the rear jaw and clamp them together. (Note: The front jaw is wider than the rear jaw so that it is easier to line up the rear jaw with the front edge of your benchtop.)

Drop a 1½" Forstner bit into each hole and tap the end with a hammer – this transfers the centerpoint of the hole to the rear jaw.

Unclamp the jaws and drill 1⅜" holes though the rear jaw. Then use your tap to tap the holes in the rear jaw (a little linseed oil or a non-drying vegetable oil makes a good lubricant).

Turn & Thread the Screws

The vise's screws are made from 2" x 2" walnut. I planed a 25"-long section to an octagon then chucked that in the lathe. I turned the middle 14" down to just a shade less than 1½". Then I crosscut the piece, ending up with two 12½"-long handles.

Clamp a vise screw with the round section facing up and use your threadbox to thread the round section. Test the results in the rear jaw. If the screw squeaks or doesn't turn freely, adjust the cutter in the threadbox so it cuts slightly deeper.

Joseph Moxon's Double-screw Vise

NO.	ITEM	DIMENSIONS (INCHES) T	W	L	MATERIAL	COMMENTS
❑ 2	Bench screws	2	2	12½	Walnut	7" of screw is 1½" in dia.
❑ 1	Front jaw	1¾	6⅛	32⅛	Maple	
❑ 1	Item	1¾	6	36⅛	Maple	
❑ 1	Item	1¾	2	30	Maple	

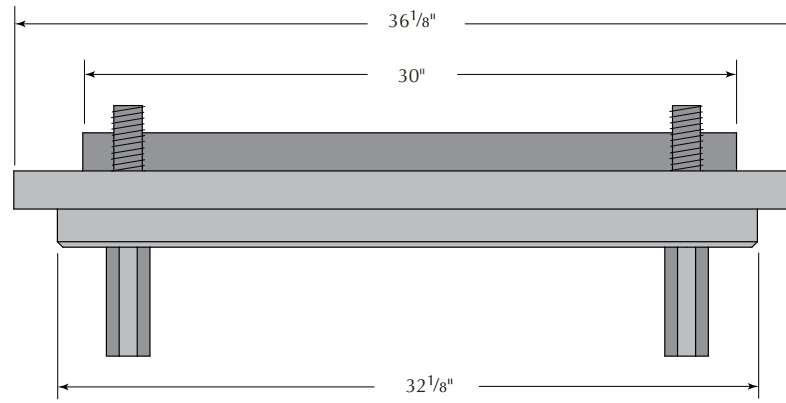

PLAN

Add the Rear Brace

The vise will be more stable if you glue a rear brace on the backside of the rear jaw, which will increase the surface area that contacts your bench. Glue and clamp the rear vise in place.

Add some details if you like. I chamfered the front edges of my front jaw and the ends of the vise screws. I applied a couple coats of an oil/varnish blend finish. I also glued on a layer of suede to the inside face of the front jaw, which improves the vise's grip even more.

I've been testing the vise for more than three months (and I made versions for co-workers and friends). If you cut dovetails, I think this vise is well worth making. Your back will thank me. **PWM**

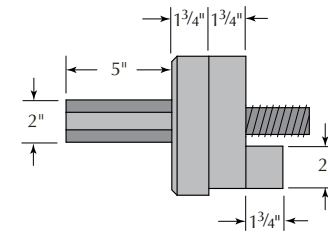

PROFILE

Chris is the author of "The Workbench Design Book," which explores ancient and ingenious workholding jigs such as this vise.

Two screws from one stick. *The two vise screws are made from one octagonal piece. Turn down the middle. Cut the piece in half. Thread the round sections.*

ONLINE EXTRAS

You'll find links to all these online extras at:
▶ **popularwoodworking.com/dec10**

VIDEO: *See a video of the author threading and tapping the wooden components.*

ARTICLE: *We have dozens of free plans for jigs on our web site.*

WEBSITE: *Read about how the prototype was developed on our blog.*

TO BUY: *Find links to buy the manual wood-threading kit for this project.*

IN OUR STORE: *New: "The Workbench Design Book."*

All of our products are available online at:
▶ **ShopWoodworking.com**

Make a 'Raamtang'

BY ZACHARY DILLINGER

This Dutch joiner's tool leverages simple design into a cheap & effective workholding device.

While studying Gerrit van der Sterre's "*Four Centuries of Dutch Planemakers*" (Primavera Pers, 2001), I ran across what the author calls a "raamtang" – Dutch for "window pliers." As you might guess, it is a joiner's tool used originally to hold narrow window sash bars for moulding.

The similarities between this entirely shop-made wedge-powered vise and the screw-powered "Moxon" vise led me to make and try a raamtang with great success for other work.

Heart of Oak

There is a lot of force exerted on the jaws of a raamtang – so much that they often bend in use. To counteract this, I chose to make mine from strong white oak.

The version of the raamtang presented here is long enough to hold up to a 24"-wide panel and stock up to about 1½" thick. Feel free to make modifications to suit the scale of work you do in your shop, but this size works well for most furniture tasks.

Prepare your ¾"-thick wedge blank and mark out the angle, then saw the pieces apart and plane the sawn edge to a smooth surface.

I like to use about a 15° or 20° angle, but the exact angle of the wedge is unimportant because you will lay out the shoulder cut from the wedge. Just remember – a shallow angle will hold with more strength than a steep angle.

Strong Arm Tactics

Use straight-grained white oak for the arms. For the jaws, pick up some 6/4

Memory help. *Plane the wedges to a consistent angle. This frees you from having to remember which wedge goes to which arm.*

PHOTOS BY THE AUTHOR; ILLUSTRATIONS BY DAN PESSELL FROM THE AUTHOR'S MODEL

Square deal. *Keep the stock of the square tight against your blanks while keeping the arm blank tight against the blade of the square.*

white oak a little more than 4" wide.

Rough-plane both faces and pick the most attractive grain pattern to serve as the top side of the vise. After that, flatten that face with your try plane. This will serve as the reference face, so make sure it is as flat as you can make it.

Next, set a marking gauge to the thinnest dimension present between the two faces of the board and mark a line all the way around. Plane the board down to this thickness, but save the final smoothing until after you've chopped the mortises.

Joint the first edge of your board. When finished, this will serve as your reference edge for laying out the arm mortises. Mark out and plane the width of the board so that it is about 4" wide, then scribe a line on each face that is 2" from the reference edge.

Because you want the mortises in both arms to line up, lay them both out at the same time before separating the jaws with your rip saw.

Start by establishing the inside lines of the mortises so that they are 24" apart. Align the arms with those lines and mark out their width along the top face. Square these four lines down both edges using the top face for the stock of the square.

Open the Jaws

Now saw the jaws apart with your rip-saw. Place the separated jaws on your benchtop with the reference edge down, then square the sawn edges with your try plane, planing a slight crown on the inside edge of the rear jaw.

Square mortise lines down the sawn edges from the reference face. Finally, lay out a 3/8" x 3/8" rabbet along the top back edge of the rear jaw; this engages with the wedges and helps them stay aligned when you drive them into place.

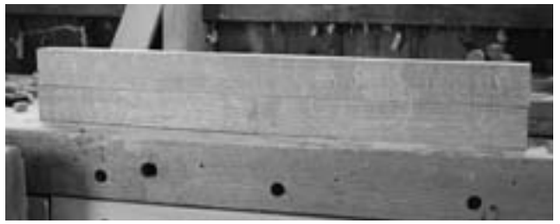

A tight grip. *The slight crown in the rear jaw will provide maximum holding power near the center of the vise.*

Lignin biceps. *Here are the raamtang arms in their final shape.*

Lay out and saw the angled cuts on the top of the arms using the wedges as templates. Next, scribe the 5/8" tongue, referencing the face of the marking gauge off what will be the bottom face of the arms. Rip the waste material away close to the line, then smooth the rough-sawn face of the tongue down to your line with planes and chisels.

Save the sawed-off waste to make the pegs that attach the arms to the front jaw. Finally, drill a pilot hole, then drive a rosehead nail into the center of the remaining thick portion to help prevent shearing this piece off in use.

Chop the Arm Mortises

Set a marking gauge to the thickness of the arm tongues so the fence is 3/8" away from the first tooth. Scribe the mortises on both edges down from the top of the jaws. If you have a mortise chisel that fits the width, chop the mortises in both jaws working from each edge. Otherwise, bore a 1/2" hole, then pare the waste to the line.

Ensure that the arms fit tightly in the front jaw mortises but have a little play in the rear jaw. I like to use a rasp to open up the rear jaw mortises a little.

Bevel the outside edge of the front jaw. Plane a 3/8" x 3/8" rabbet along the top back edge of the rear jaw. Smooth plane the faces, then break all the outside corners on the jaws. Slide the arms through the rear jaw and into the front jaw. Line up the end of arm so that it slightly proud of the reference face.

Strike zone. *I prefer to strike my mortise layout lines with a sharp bench chisel.*

Smooth action. *This arm has a nice loose fit through the rear jaw; this will enable the vise to work without binding.*

Line it up. *Note that the bottom of the rabbet aligns with the top edge of the arm mortises.*

Bore 3/8" peg holes through the fixed front jaw and the arms. Make two roughly rounded 3/8"-thick pegs from the arm waste you sawed away earlier. Check one final time to ensure that the rear jaw slides smoothly on the arms and make any necessary adjustments.

Finally, drive the pegs home into the peg holes and make any final adjustments to the wedges to ensure they hold tight. Give the entire piece a couple of coats of wiping varnish to complete the project.

Raamtang

NO.	ITEM	DIMENSIONS (INCHES) T	W	L	MATERIAL	COMMENTS
❑ 2	Jaws	1 3/8	2	30	White oak	
❑ 2	Arms	1 1/2	1	8	White oak	
❑ 2	Wedges	3/4	3 3/8	12 3/8	White oak	Taper to 1"

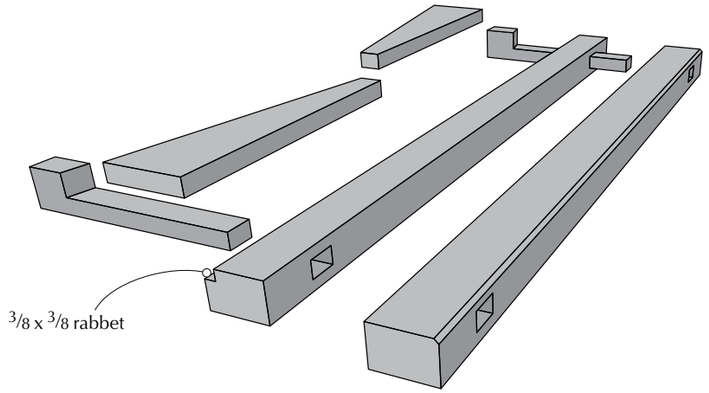

EXPLODED VIEW

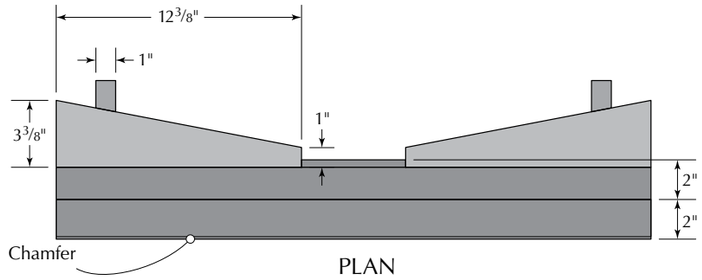

PLAN

Using the Raamtang

If you've seen the Moxon vise in action, you are familiar with many of the things of which this type of vise is capable.

I have used the raamtang in conjunction with my holdfasts to dovetail case sides, a task at which it excels. I have also used it to help keep boards aligned while gluing them into wide panels.

This vise also is an excellent appliance to hold and support a workpiece while cutting a mortise; clamping along the outside helps prevent you from blowing out the side of the mortise with the chisel.

As you might expect, given that this was originally designed as a joiner's appliance (namely for holding window pieces for shaping), it excels at holding stock for moulding, rabbeting and even planing grooves.

Side action. *Clamping the sides of the piece being mortised helps prevent cheek blowout.*

Working out. *Here's the task for which the raamtang was designed – holding small pieces of moulding for planing.*

When it comes to planing the saw marks off the back of a freshly stuck piece of hand-cut moulding, I've yet to find anything better.

It holds like a bear trap (especially with a bit of leather glued to the working faces), is simple to make and costs next to nothing if you use pieces from the scrap bin. What else can you ask for from a shop appliance? **PWM**

Zachary is the author of "With Saw, Plane and Chisel" and builds period furniture in his Michigan shop.

ONLINE EXTRAS

For links to all online extras, go to:
■ **popularwoodworking.com/oct15**

WEB SITE: *Visit theeatoncountyjoinery.com for the author's blog.*

IN OUR STORE: *"With Saw, Plane and Chisel," a book by the author.*

BLOG: *Read a roundup up of our many Moxon Vise posts.*

IN OUR STORE: *Go "Beyond the Vise: Workholding for Hand Tools," a webinar hosted by Steve Branam.*

TO BUY: *"Jigs & Fixtures for the Hand Tool Woodworker," by Graham Blackburn.*

Our products are available online at:
■ **ShopWoodworking.com**

Binding Clamps

BY DONALD C. WILLIAMS

Make your own light-duty one-handed workholding wonders.

Like most workshops, mine is well-populated with spring clamps, the ubiquitous tool for applying localized pressure with one hand while holding the workpiece (or workpieces) with the other. But one of the most intractable problems is the need for either gentle holding pressure or a much greater throat depth than the spring clamp provides.

Yes, spring clamps come in large sizes with deeper throats, but using them is hardly what I would call a one-handed operation. Many times all I need is for the clamp to gently keep things in contact or alignment, sometimes over a comparatively long distance; that requires a significant throat depth.

I recently built a set of clamps that performs this function wonderfully. They can be made from a variety of materials to an almost infinite set of variations.

These simple tools are built on the long-standing principles employed in a wide variety of clamping devices, both old and new. In the case of the ancient holdfast, the arm and the shaft are united, and the binding occurs when the shaft is driven down into a hole in the workbench's top with a mallet. On (the much newer) F-style clamps, the movable jaws bind against the shaft, with the force augmented by contact pads that are moved by screws or cam levers.

With my clamps, the clamping force for the contact points is accomplished by pinching the arms together, usually between thumb and forefinger, which causes them to bind on the flexible shaft; that flex exerts a spring force of its own.

Rods & arms. *Graphite rods of various lengths and diameters, and a couple sizes of clamp arms, allow you to customize these light-duty clamps to a variety of needs.*

Nothing wasted. *On most of the arms, I drilled two sets of holes – one end accommodates an 1/8" shaft, the other a 3/16" shaft. As you drill, save the waste. (See "Make Your Own Plexiglas Cement" at right.)*

These clamps require only two components: a pair of clamp arms that can be made from almost any scrap (I used 3/8"-thick Plexiglas sheet), and a shaft along which the clamp arms slide and bind. I chose round graphite rod for my shafts because it is modestly priced but very high performance. Both of the materials are good choices because, unlike wood, they are unaffected by humidity swings.

I was uncertain how much the graphite rod would flex in use so I ordered several sizes (1/8", 3/16" and 1/4") from dragonplate.com. I found that for my needs it was a Goldilocks thing; the 1/8" rod was a little too flexible for all but the most delicate clamping operations (though highly valued when needed) and the 1/4" was a little too stout, but the 3/16" rod worked well in most cases.

I cut the rods to a variety of lengths because all the parts can be interchanged. When cutting graphite rod with a fine saw, in my case a jeweler's saw, it is helpful to wrap the rod with some tape to keep the glass fibers from shredding.

Then I cut the Plexiglas pieces into arms of varying lengths, and because many of my clamping needs involve convoluted shapes or orientations, I was prompted to make some customized acrylic contact pads for some of the clamping arms.

(One particular need, shown below, was for holding pressure to be applied in specific places to hold some split tortoiseshell in alignment while the backing adhesive being used to repair them hardened.)

Using my drill press, I bored holes in the arms 1/64"-diameter larger than the rods that pass through them. This provides just enough room for the unstressed arms to slide smoothly, but with a little applied stress they lock in place instantly.

I even made most of the arms with two sets of holes, 9/64" diameter at one end and 13/64" diameter at the other, so they can accommodate the 1/8" shaft for really delicate operations, and the 3/16" rod for more typical use, thus getting twice as many clamps for the same effort and materials.

In the end, for a few hours and a few dollars, I made an excellent kit of several dozen clamps. **PWM**

Don retired as senior furniture conservator after almost three decades with the Smithsonian Institution. Follow his work at donsbarn.com.

Pressure points. *The clamps on the left have no pads; the gentle force of the arms is spread across the face where it contacts the work. Pads (right) put the pressure precisely where needed.*

MAKE YOUR OWN PLEXIGLAS CEMENT

When you are drilling the holes in the clamping arms, save some of the shavings. If you put them in a glass container with some methyl-ethyl ketone (MEK), the MEK will dissolve the acrylic shavings and turn the entire mass into a viscous solution that is near-perfect for welding Plexiglas pieces to each other. Just apply the cement to each face of the glue line, press them together and let them sit overnight. In the morning they will be rock-solid.

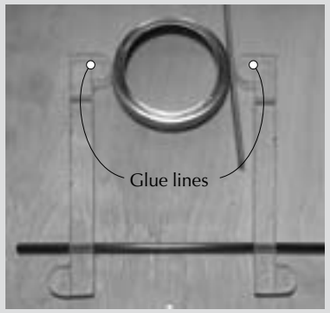

Glue press. *Pressure exerted by the clamps themselves keeps the pads in place as the Plexiglas glue dries.*

ONLINE EXTRAS

For links to all online extras, go to:
- **popularwoodworking.com/dec16**

BLOG: *Read the author's blog and see more of his work.*

BLOG: *Get a behind-the-scenes look at the author's work at the Smithsonian Institution.*

IN OUR STORE: *"Creating Historic Furniture Finishes," by Don Williams.*

IN OUR STORE: *"Simple Parquetry Techniques," by Don Williams.*

Our products are available online at:
- **ShopWoodworking.com**

LEAD PHOTO BY AL PARRISH; STEP PHOTOS BY THE AUTHOR

Ideas ▪ Instruction ▪ Inspiration

Get downloadable woodworking instruction when you sign up for our free newsletter at **popularwoodworking.com**.

Visit **popularwoodworking.com** to subscribe (look for the red "Subscribe" button on the navigation bar).

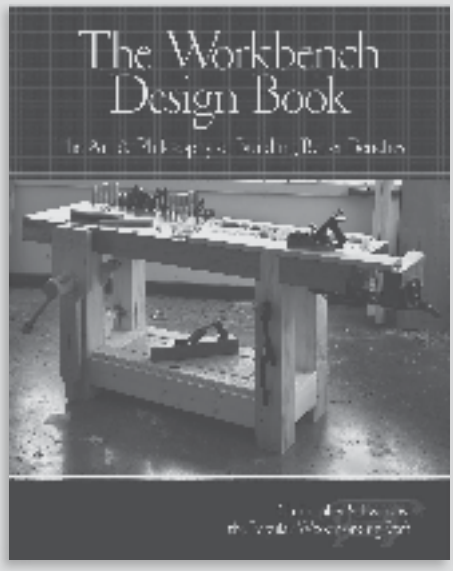

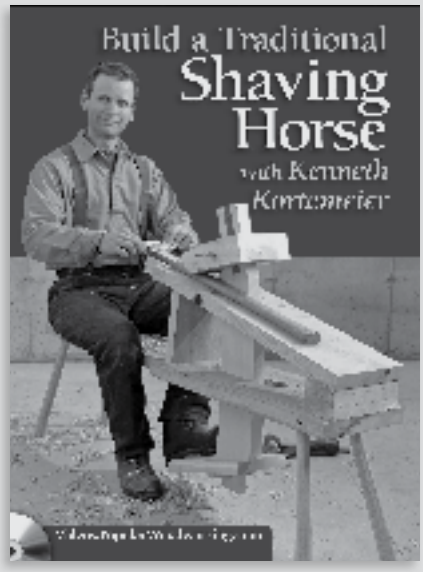

These and other great Popular Woodworking products are available at your local bookstore, woodworking store or online supplier. Visit our website at **shopwoodworking.com**.

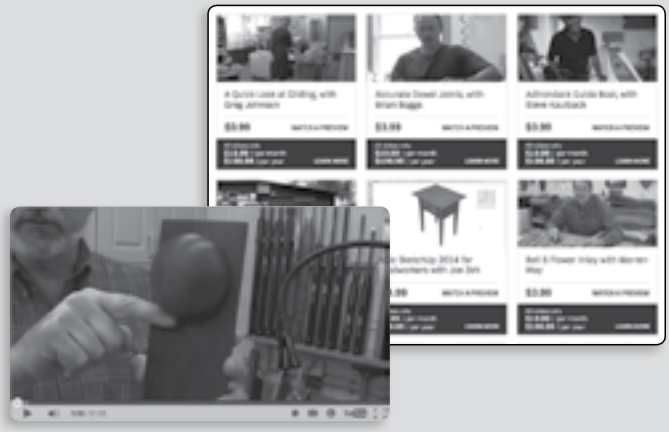

Popular Woodworking Videos

Subscribe and get immediate access to the web's best woodworking subscription site. You'll find more than 700 hours of woodworking video tutorials and full-length video workshops from world-class instructors on workshops, projects, SketchUp, tools, techniques and more!

videos.popularwoodworking.com

Visit our Website

Find helpful and inspiring articles, videos, blogs, projects and plans at **popularwoodworking.com**.

For behind the scenes information, become a fan at **Facebook.com/popularwoodworking**

For more tips, clips and articles, follow us at **twitter.com/pweditors**

For visual inspiration, follow us at **pinterest.com/popwoodworking**

For free videos visit **youtube.com/popularwoodworking**

Follow us on Instagram **@popularwoodworking**

Dependable workholding accessories available at leevalley.com

Bench dogs are indispensable for clamping workpieces onto a workbench. The Veritas® pedigreed bench dogs are available in a variety of styles to suit the task at hand. Some have non-corroding faces that are kind to your tools and make it easy to clamp curved work and irregular shapes. Others have a wedging mechanism that anchors it firmly horizontally or vertically in thin material. Yet others have a low profile for unobstructed clamping that allows good access to work from all sides. While their appearance qualifies them as showdogs, these are among the most reliable, hard-working dogs you'll ever own. All are made in Canada.

Browse our catalog online or download it to the Lee Valley Library app for iPad®, iPod®, iPhone® or Android™ devices.

1-800-683-8170 leevalley.com

Find us on:

Lee Valley & veritas®

1. 05G23.05 Veritas® 17 1/2" Planing Stop, ea.
2. 05G23.01 Veritas® 9 3/4" Planing Stop, ea.
3. 05G14.01 Veritas® Hold-Down
4. 05G14.02 Veritas® Optional 5 1/2" Post
5. 05G10.02 Veritas® Wonder Pup®, each
6. 05G10.01 Veritas® Wonder Dog®, each
7. 05G10.30 Veritas® Quick-Release Wonder Dog®
8. 05G22.12 Veritas® Bench Blade with Wedge-Lock Post
9. 05G22.10 Veritas® Bench Blade with Standard Post
10. 05G19.01 Veritas® Surface Clamp, ea.
11. 05G04.10 Veritas® Muzzles for Bench Dogs, pr.
12. 05G04.06 Veritas® Muzzles for Bench Pups®, pr.
13. 05G04.01 Veritas® 4 3/8" Bench Dog, ea.
14. 05G04.03 Veritas® 2 3/8" Bench Pups®, ea.
15. 05G10.22 Veritas® Prairie Dog™, pr.
16. 05G47.01 Veritas® Fast-Action Hold-Down

veritas® Combination Plane

Designed with the discerning woodworker in mind

Originally created to replace stacks of wooden-bodied molding and joinery planes, combination planes are defined by their flexibility. Invaluable for restoration work, a combination plane remains an ideal choice for times when you need to make a short run of custom molding.

The Veritas Combination Plane is the result of four years of research and development. It is precisely machined, easy to adjust and holds settings securely – all features that, together with the improved blade technology, also make it fully reliable in use. It represents our continuing commitment to designing and manufacturing exquisite woodworking hand tools that do not limit the expression of the person that is wielding it. Like all Veritas products, our combination plane is designed with the discerning woodworker in mind; it is built to the highest standards, comfortable to handle, and made in Canada.

We have prepared a 16-page brochure that provides detailed information about the Veritas® Combination Plane. You can view it online or add a copy to your next order.

1-800-683-8170
leevalley.com

Configure the plane for left- or right-hand use or to accommodate grain direction.

Accessories
Two Baltic birch plywood boxes are available separately: one provides a place to keep the fully assembled combination plane; the other, holds blades side by side in two 6" long rows.

Our combination plane will accept the right-hand (and unhanded) blades available with the Veritas Small Plow Plane, as well as the blades used with the Stanley #45 and most of those used with the Stanley #55. We also offer an all-new assortment of blades to create a variety of decorative profiles.

Box for combination plane

Blade box

Combination plane blades