Fast & Easy Finishes: 1 Day (or Less)

Arts & Crafts Accent Lamp

POPULAR Woodworking MAGAZINE

June 2012 ■ #197

Ancient Chair, Modern Methods

Maloof Mortise Adds Strength

No Glue, No Clamps

Master the Joint that Lasts for Centuries

Shaker Cabinet

7 Key Techniques, 1 Classic Project

Plane Wisdom

The Whys & Hows of Rabbets & Plows

New Tenon Jig

Perfect Joints – Every Time

Be a Better Designer

Proportions You Can Count On

fw media
US $5.99
06
0 74470 01355 6
Display until June 25, 2012

popularwoodworking.com

Grizzly® Industrial

Purveyors of Fine Machinery®, Since 1983

10" HYBRID TABLE SAW

BEAUTIFUL WHITE COLOR!

- Motor: 2 HP, 110V/220V, single-phase
- Precision-ground cast iron table with wings measures: 27" x 40"
- Arbor: 5/8" • Arbor speed: 3850 RPM
- Capacity: 3 1/8" @ 90°, 2 3/16" @ 45°
- Rip capacity: 30" R, 12" L
- Quick change riving knife
- Cast iron trunnions
- Approx. shipping weight: 354 lbs.

CSA C US 232857

INCLUDES BOTH REGULAR & DADO BLADE INSERTS

G0715P ONLY $795.00 — $99 shipping (lower 48 states)

17" HEAVY-DUTY BANDSAW

BEAUTIFUL WHITE COLOR!

- Motor: 2 HP, 110V/220V, single-phase, TEFC
- Precision-ground cast iron table size: 17" sq.
- Table tilt: 10° L, 45° R
- Cutting capacity/throat: 16 1/4"
- Max. cutting height: 12 1/8"
- Blade size: 131 1/2" L (1/8"–1" W)
- Blade speeds: 1700 & 3500 FPM
- Quick release blade tension lever
- Approx. shipping weight: 342 lbs.

MADE IN TAIWAN

See our website for Reviews & Awards grizzly.com

INCLUDES DELUXE EXTRUDED ALUMINUM FENCE, MITER GAUGE & 1/2" BLADE

G0513P ONLY $895.00 — $99 shipping (lower 48 states)

ALSO AVAILABLE

G0513 HEAVY-DUTY 17" BANDSAW ONLY $950.00

10" LEFT-TILTING CONTRACTOR-STYLE TABLE SAW with Riving Knife

- Motor: 1 1/2 HP, 110V/220V, single-phase
- Precision-ground cast iron table with wings
- Table size: 25 1/2" x 40" • Arbor: 5/8"
- Arbor speed: 4000 RPM
- Capacity: 3 1/8" @ 90°, 2 1/4" @ 45°
- Rip capacity: 30" R, 12" L
- Approx. shipping weight: 221 lbs.

New!

MADE IN TAIWAN

MADE IN ISO 9001 FACTORY!

FREE 10" CARBIDE-TIPPED BLADE

G0732 ONLY $795.00 — $99 shipping (lower 48 states)

10" LEFT-TILTING TABLE SAWS with Riving Knife & Cast Iron Router Table

- Motor: 3 HP or 5 HP, 220V, single-phase
- Precision-ground cast iron table size with wings: 27" x 48"
- Arbor: 5/8"
- Cutting capacity: 25 5/8" R, 8" L
- Max. depth of cut: 3" @ 90°, 2 1/8" @ 45°
- Approx. shipping weight: 546 lbs.

MADE IN TAIWAN

FREE 10" CARBIDE-TIPPED BLADE

$150 shipping (lower 48 states)

CSA C US 177335

G1023RLW 3 HP ONLY $1250.00

G1023RLWX 5 HP ONLY $1350.00

10" CABINET TABLE SAW with Riving Knife

3 HP LEESON® MOTOR!

- Motor: 3 HP, 220V, single-phase
- Precision-ground cast iron table
- Table size with extension: 27" x 40"
- Arbor: 5/8" • Arbor speed: 4300 RPM
- Max. depth of cut: 3 1/8" @ 90°, 2 3/16" @ 45°
- Max. rip capacity: 50"
- Max. dado width: 13/16"
- Approx. shipping weight: 542 lbs.

FREE 10" CARBIDE-TIPPED BLADE

CSA C US 232857

G0690 ONLY $1325.00 — $150 shipping (lower 48 states)

10" CABINET TABLE SAW with Riving Knife & Extension Rails

- Motor: 3 HP, 220V, single-phase
- Precision-ground cast iron table
- Table size with extension: 27" x 74 3/4"
- Arbor: 5/8" • Arbor speed: 4300 RPM
- Max. depth of cut: 3 1/8" @ 90°, 2 3/16" @ 45°
- Max. rip capacity: 50"
- Max. dado width: 13/16"
- Approx. shipping weight: 572 lbs.

Woodworker TOP VALUE APPROVED 2009

3 HP LEESON® MOTOR!

CSA C US 232857

FREE 10" CARBIDE-TIPPED BLADE

G0691 ONLY $1425.00 — $150 shipping (lower 48 states)

ULTIMATE 14" BANDSAW

- Motor: 1 HP, 110V/220V, single-phase, TEFC
- Precision-ground cast iron table size: 14" sq.
- Table tilt: 10° L, 45° R
- Cutting capacity/throat: 13 1/2"
- Max. cutting height: 6"
- Blade size: 92 1/2"–93 1/2" L (1/8"–3/4" W)
- Blade speeds: 1500 & 3200 FPM
- Approx. shipping weight: 196 lbs.

See our website for Reviews & Awards grizzly.com

MADE IN TAIWAN

CSA C US 252923

MADE IN ISO 9001 FACTORY!

G0555P ONLY $495.00 — $79 shipping (lower 48 states)

19" HEAVY-DUTY BANDSAW

EXTREME SERIES

- Motor: 3 HP, 220V, single-phase, TEFC, 60 Hz
- Precision-ground cast iron table size: 26 3/4" x 19"
- Table tilt: 5° L, 45° R
- Cutting capacity/throat: 18 1/4"
- Max. cutting height: 12"
- Blade size: 143" L (1/8"–1 1/4" W)
- Blade speeds: 1700 & 3500 FPM
- Approx. shipping weight: 480 lbs.

DELUXE RE-SAW FENCE INCLUDED

CSA C US 252923

MADE IN TAIWAN

MADE IN ISO 9001 FACTORY!

G0514X2 ONLY $1495.00 — $99 shipping (lower 48 states)

PRICING CODE 12P0P

MENTION THIS CODE WHEN PLACING YOUR ORDER

14419R

1-800-523-4777

TECHNICAL SERVICE: 570-546-9663

FAX: 800-438-5901

FULL YEAR WARRANTY GRIZZLY Power Tools & Machinery

3 GREAT SHOWROOMS! BELLINGHAM, WA • MUNCY, PA • SPRINGFIELD, MO

FREE BROKERAGE RATES ON MACHINERY ORDERS TO CANADA!
PLEASE VISIT GRIZZLY.COM FOR DETAILS

- OVER A MILLION SQUARE FEET PACKED TO THE RAFTERS WITH MACHINERY & TOOLS
- 2 OVERSEAS QUALITY CONTROL OFFICES STAFFED WITH QUALIFIED GRIZZLY ENGINEERS
- HUGE PARTS FACILITY WITH OVER 1 MILLION PARTS IN STOCK AT ALL TIMES
- TRAINED SERVICE TECHNICIANS AT ALL 3 LOCATIONS
- 24 HOUR ORDERING BY PHONE OR ONLINE • MOST ORDERS SHIP THE SAME DAY

FREE 2012 CATALOG!
THOUSANDS OF HIGH QUALITY MACHINES & TOOLS AT INCREDIBLE PRICES!

12" JOINTER/PLANER COMBINATION MACHINE

MADE IN TAIWAN

BEAUTIFUL WHITE COLOR!

NEW END-MOUNTED FENCE

- Motor: 5 HP, 220V, single-phase
- Jointer table size: 14" x 59½"
- Cutterhead dia.: 3⅛"
- Cutterhead speed: 5034 RPM
- Max. jointer depth of cut: ⅛"
- Max. width of cut: 12"
- Planer feed rate: 22 FPM
- Max. planer depth of cut: ⅛"
- Max. planer cutting height: 8"
- Planer table size: 12¼" x 23⅛"
- Approx. shipping weight: 734 lbs.

CARBIDE INSERT SPIRAL CUTTERHEAD!

FREE SAFETY PUSH BLOCKS

G0634XP ONLY $2195.00

ALSO AVAILABLE
G0633 JOINTER/PLANER ONLY $1995.00
G0634Z SPIRAL CUTTERHEAD MODEL ONLY $2450.00

$150 shipping lower 48 states

CYCLONE DUST COLLECTOR

BEAUTIFUL WHITE COLOR!

- Motor: 1½ HP, 110/220V, single-phase, TEFC, 3450 RPM
- Air suction capacity: 775 CFM
- Static pressure at rated CFM: 1.08"
- Intake port: 6" with included 5" optional port
- Impeller: 13½"
- Height: 68½"
- Built-in remote control switch
- Approx. shipping weight: 210 lbs.

MADE IN TAIWAN

PLEATED FILTER IS PROTECTED BY A STEEL CAGE

FULLY MOBILE WITH BUILT-IN CASTERS

ONLY 68½" TALL!

G0703P ONLY $725.00

$79 shipping lower 48 states

8" JOINTERS

- Motor: 3 HP, 220V, single-phase, TEFC
- Precision-ground cast iron table size: 9" x 72½"
- Max. depth of cut: ⅛"
- Max. rabbeting depth: ½"
- Cutterhead dia.: 3"
- Cutterhead speed: 5000 RPM
- Cuts per minute: 20,000
- Approx. shipping weight: 500 lbs.

FREE SAFETY PUSH BLOCKS

BUILT-IN MOBILE BASE

CHOOSE EITHER 4 HSS KNIVES OR SPIRAL CUTTERHEAD MODEL

4 KNIFE CUTTERHEAD
G0656P ONLY $795.00

SPIRAL CUTTERHEAD
G0656PX ONLY $1195.00

$150 shipping lower 48 states

8" X 76" JOINTERS

- Motor: 3 HP, 220V, single-phase, TEFC, 3450 RPM
- Precision-ground cast iron table size: 8" x 76⅜"
- Infeed table size: 8" x 43⅜"
- Cutterhead knives (G0490): 4 HSS, 8" x ¾" x ⅛"
- Cutterhead speed: 5350 RPM
- Cutterhead dia.: 3⅜"
- Max. depth of cut: ⅛"
- Max. rabbeting depth: ½"
- Deluxe cast iron fence size: 36" L x 1¼" W x 5" H
- Approx. shipping weight: 597 lbs.

FREE SAFETY PUSH BLOCKS

BUILT-IN MOBILE BASE

CSA C US 208624

4 KNIFE CUTTERHEAD
G0490 ONLY $945.00

SPIRAL CUTTERHEAD
G0490X ONLY $1250.00

$150 shipping lower 48 states

15" PLANERS

New!

- Motor: 3 HP, 220V, single-phase
- Precision-ground cast iron table size: 15" x 20"
- Min. stock thickness: 3/16"
- Min. stock length: 8"
- Max. cutting depth: ⅛"
- Feed rate: 16 FPM & 30 FPM
- Cutterhead speed: 5000 RPM
- Approx. shipping weight: 660 lbs.

CHOOSE EITHER 3 KNIFE OR SPIRAL CUTTERHEAD MODEL

BUILT-IN MOBILE BASE

G0453P ONLY $1050.00

WITH SPIRAL CUTTERHEAD
G0453PX ONLY $1650.00

$150 shipping lower 48 states

20" PLANERS

Z SERIES

- Motor: 5 HP, 220V, single-phase
- Precision-ground cast iron table size: 20" x 25¾" (20" x 55½" with extension)
- Max. cutting height: 8"
- Max. cutting depth: ⅛"
- Feed rate: 16 & 20 FPM
- Cutterhead dia.: 3⅛"
- Cutterhead knives: 4 HSS (G0454)
- Cutterhead speed: 5000 RPM
- Approx. shipping weight: 920 lbs.

CSA C US 208624

BUILT-IN MOBILE BASE

2 SPEEDS!

4 KNIFE CUTTERHEAD
G0454 ONLY $1575.00

SPIRAL CUTTERHEAD
G0454Z ONLY $2495.00

$179 shipping lower 48 states

10" DRUM SANDER

- Motor: 1½ HP, 110V, single-phase
- Conveyor motor: 1/10 HP
- Drum speed: 2300 FPM
- Drum size: 5⅛" x 10"
- Max. sanding width: 10"
- Max. workpiece height: 2 15/16"
- Min. workpiece height: 3/16"
- Variable feed speeds: 1–10 FPM
- 4" dust port
- Approx. shipping weight: 220 lbs.

WHEELS & STOWABLE TRANSPORT HANDLES FOR MOBILITY

G0716 ONLY $415.00

$79 shipping lower 48 states

1 HP WALL MOUNT DUST COLLECTOR

MADE IN TAIWAN

- Motor: 1 HP, 110V/220V, single-phase
- Amps: 14/7 • Intake size: 4"
- Bag size (dia. x depth): 13½" x 24"
- Balanced steel, radial fin impeller
- Air suction capacity: 450 CFM
- Max. static pressure: 7.2"
- Approx. shipping weight: 51 lbs.

SPECIAL WALL MOUNT DESIGN!

EASY MOUNTING WALL BRACKET & LOCKING THUMB SCREW SECURES DUST COLLECTOR IN PLACE!

G0710 ONLY $174.95

GRIZZLY GIFT CERTIFICATES TAKE THE GUESSWORK OUT OF GIVING!

See our website for Reviews & Awards grizzly.com

grizzly.com®
OVER 12,000 PRODUCTS ONLINE!

PayPal · VISA · MasterCard · BillMeLater · AMERICAN EXPRESS · DISCOVER NOVUS

CARD #57 OR GO TO PWFREEINFO.COM

Faster, more accurate layouts with
Woodpeckers Rules and Stops

Five different lengths available; 6", 12", 24", 36"and 50".

Measuring and marking are critical first steps in any woodworking project. Woodpeckers Woodworking Rules and Stops are designed to provide you with layout precision and versatility that can't be achieved with a tape measure. Put these tools to work and you'll find that it's easy to take exact measurements quickly and put sharp pencil or scribe lines right on the money every time.


Available with different scale orientations in inch or metric.

Woodpeckers Woodworking Rules are precision, solid aluminum tools machined to provide you with a pair of straight, parallel edges for marking, measuring or guiding razor-edged cuts in veneer and other thin materials.


The perfect guide for your pencil or knife.

We make these rulers beefy so that they won't shift off the layout while you're marking or cutting. All five sizes (6", 12", 24", 36" and new 50") are 2¼" wide and have a relief cut along the back to ensure a flat, stable stance and feature a finger groove down the center for better control.

With a durable anodized finish and laser-inscribed markings, these are tools for a lifetime. A variety of different linear and centering scale combinations are available to suit your particular needs including combination inch/metric.

Woodpeckers Hook Stop and Rule Stop are perfect companions for our Woodworking Rules. When you fasten the Hook Stop to the end of a Woodworking Rule, you've got a speedy, surefire way to precisely align the rule's end flush with an edge. You can make an exact length measurement, even when a board end is out of reach.


Shown with the 2" Rule Stop.

Our Rule Stop adjusts to fit any ruler up to 2¼" wide, and can be clamped in place anywhere along a ruler's length. This accessory turns your Woodworking Rule into a versatile marking gauge.

Precision is important, but it shouldn't be a struggle. That's why Woodpeckers Woodworking Rules and Stops are such valuable workshop companions.


Shown with the Hook Stop.

Order Yours Today!

Woodworking Rule 6"	$12.99
Woodworking Rule 12"	$19.99
Woodworking Rule 24"	$29.99
Woodworking Rule 36"	$39.99
Woodworking Rule 50"	$64.99
Hook Stop	$19.99
2" Rule Stop	$32.99

**Prices subject to change without notice.*

Made in U.S.A.

See our full line of American made woodworking tools at your local dealer and woodpeck.com

11050 Industrial First Ave. • North Royalton, Ohio 44133 • (800) 752-0725

CARD #52 OR GO TO PWFREEINFO.COM

CONTENTS

JUNE 2012

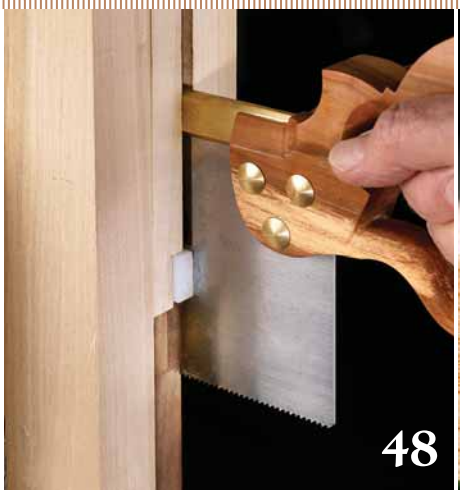

FEATURES

COVER, SHAKER COUNTER & TENON JIG PHOTOS BY AL PARRISH; DRAWBORE PHOTO BY PETER FOLLANSBEE; PLANE PHOTO BY CHRISTOPHER SCHWARZ

CONTENTS

JUNE 2012

REGULARS

POPULAR WOODWORKING MAGAZINE

Number 197, June 2012. *Popular Woodworking Magazine* (ISSN 0884-8823, USPS 752-250) is published 7 times a year, February, April, June, August, October, November and December, which may include an occasional special, combined or expanded issue that may count as two issues, by F+W Media, Inc. Editorial and advertising offices are located at 8469 Blue Ash Road, Suite #100, Cincinnati, OH 45236. Unsolicited manuscripts, photographs and artwork should include ample postage on a self-addressed, stamped envelope (SASE); otherwise they will not be returned. Subscription rates: A year's subscription (7 issues) is $24.95; outside of the U.S. add $7/year ▪ Canada Publications Mail Agreement No. 40025316. Canadian return address: 2835 Kew Drive, Windsor, ON N8T 3B7 ▪ Copyright 2011 by *Popular Woodworking Magazine*. Periodicals postage paid at Cincinnati, Ohio, and additional mailing offices. Postmaster: Send all address changes to *Popular Woodworking Magazine*, P.O. Box 421751, Palm Coast, FL 32142-1751 Canada GST Reg. #R122594716 ▪ Produced and printed in the U.S.A.

PLANE PHOTO BY AL PARRISH; HINGE PHOTO BY ADAM CHERUBINI; AEROSOL PHOTO BY BOB FLEXNER; TABLE PHOTO BY GEORGE R. WALKER

Sharpen your hand- and power-tool skills at the **ultimate woodworking weekend**—now two locations for your convenience!

Woodworking In America

NEW LOCATION!

OCTOBER 12–14, 2012
Pasadena, CA

NOVEMBER 2–4, 2012
Cincinnati, OH

Get face-to-face instruction from the world's best woodworkers, meet the staff of *Popular Woodworking Magazine*, and test-drive the newest products from top 50+ toolmakers!

PERFECT YOUR WOODWORKING SKILLS

Choose from 60 sessions with master woodworkers Roy Underhill, Christopher Schwarz and others on topics including:

- Hand-tool setup and techniques
- Power-tool techniques
- Hybrid woodworking
- Furniture Design
- Carving
- Turning
- and much more!

Register today at woodworkinginamerica.com

BROUGHT TO YOU BY Popular Woodworking Magazine

Shop Woodworking · Lie-Nielsen Toolworks Inc. · Woodcraft · Bridge City Tool Works · Gorilla Glue

FIND US ON

Try, Try Again

In woodworking, as in life, success is the product of failures. The only way I ever learned to cut dovetails, for instance, was by standing at a workbench with a stack of boards, marking tools, chisels and a saw. I made so many mistakes, day after day, that I nearly gave up. Sweaty, frustrated and nearly defeated, I decided to give it one more try. Following the advice of dovetail guru Frank Klausz (which to me had initially sounded ridiculous, by the way) I didn't even mark them out; I sawed what looked right to my eye, marked the tails off the pins and chopped out the waste. I clamped the pin board in my vise and sat the tails atop it. When I pushed down with my hand – eureka – the tails started to slide in place. And they were reasonably tight.

I've figured out that my eventual success, which came by not trying so hard, was possible only because I'd spent so much time trying so desperately. I'd read enough to understand, theoretically at least, the intricacies of cutting dovetails, and had spent enough time and frustration trying to exercise what I'd read, that it slowly became ingrained in my head and my hands. It certainly didn't hurt to have Klausz's advice rattling around in the back of my head. My dovetails weren't perfect, but they were leaps and bounds better than anything I'd cut before, and 30 minutes later I'd assembled my first dovetailed box. But I couldn't cut the joints completely by myself – I needed every ounce of advice that I'd read and been told. And that's where I hope this magazine comes in.

As editors, one of the most challenging things we face is figuring out how to add more value to the magazine. Not only do we try to follow the same approach that has defined this magazine for years – deliver reasoned advice and inspiration from some of the best makers working in the field today – but we also try to make each issue more compelling, easier to understand and more inspiring. We are convinced that the answer lies in creating more articles and departments and larger, more informative photos. To add the pages needed to deliver these new features, we had to change the format of the magazine slightly. We hope you'll enjoy the additional pages and the new features. In the coming months, keep your eye out for new departments and a few surprises.

We've also been nailing down the final details of the 2012 Woodworking in America (WIA) conferences. Yes, we are proud to announce that there will be two this year: the first in Pasadena, Calif., Oct. 12-14, and the second in Greater Cincinnati Nov. 2-4. Both shows offer exceptional speakers and a unique experience. You'll learn from true masters working at the top of their fields. And, in the Marketplace, take a look at the best new tools and finest antique tools available. Of course, you'll also enjoy the camaraderie of fellow woodworkers. To sign up or learn more about the conferences, go to woodworkingin america.com.

Between the magazine, the WIA conferences and the content at popularwoodworking.com, we strive to do everything except cut the dovetails for you. But you wouldn't want us to do that anyway. Whether they fit together or not, cutting them is still the best part. **PWM**

Matthew Teague

PHOTO BY THE AUTHOR

POPULAR WOODWORKING MAGAZINE

JUNE 2012, VOL. 32, NO. 3
popularwoodworking.com
EDITORIAL OFFICES 513-531-2690

PUBLISHER & GROUP EDITORIAL DIRECTOR ■ Kevin Ireland
kevin.ireland@fwmedia.com, x11407

EDITOR ■ Matthew Teague
matthew.teague@fwmedia.com, x11007

SENIOR ART DIRECTOR ■ Daniel T. Pessell
daniel.pessell@fwmedia.com, x11396

EXECUTIVE EDITOR ■ Robert W. Lang
robert.lang@fwmedia.com, x11327

SENIOR EDITOR ■ Steve Shanesy
steve.shanesy@fwmedia.com, x11238

MANAGING EDITOR ■ Megan Fitzpatrick
megan.fitzpatrick@fwmedia.com, x11348

ONLINE COMMUNITY MANAGER ■ Thomas Nunlist
thomas.nunlist@fwmedia.com, x11008

CONTRIBUTING EDITORS ■ Adam Cherubini, Bob Flexner, Glen D. Huey, Christopher Schwarz

PHOTOGRAPHER ■ Al Parrish

F+W MEDIA, INC.
CHAIRMAN & CEO ■ David Nussbaum
CFO ■ James Ogle
PRESIDENT ■ Sara E. Domville
CHIEF DIGITAL OFFICER ■ Chad Phelps
SENIOR VICE PRESIDENT, OPERATIONS ■ Phil Graham
IT DIRECTOR ■ Jim Kuster
VICE PRESIDENT, EVENTS ■ Cory Smith

ADVERTISING
VICE PRESIDENT, SALES ■ Dave Davel
ADVERTISING DIRECTOR ■ Don Schroder
331 N. Arch St., Allentown, PA 18104
TEL. 610-821-4425; FAX. 610-821-7884
d.schroder@verizon.net
ADVERTISING SALES COORDINATOR ■ Connie Kostrzewa
TEL. 715-445-4612 x13883
connie.kostrzewa@fwmedia.com

NEWSSTAND
For newsstand sales, contact Scott T. Hill:
scott.hill@procirc.com

SUBSCRIPTION SERVICES:
Subscription inquiries, orders and address changes can be made at popularwoodworking.com (click on "Customer Service"). Or by mail: *Popular Woodworking Magazine*, P.O. Box 420235, Palm Coast, FL 32142-0235. Or call 877-860-9140. Include your address with all inquiries. Allow 6 to 8 weeks for delivery.

NEWSSTAND DISTRIBUTION:
Curtis Circulation Co., 730 River Road, New Milford, NJ 07646. PHONE: 201-634-7400. FAX: 201-634-7499.

BACK ISSUES are available. Call 800-258-0929 for pricing or visit popularwoodworking.com. Send check or money order to: *Popular Woodworking Magazine* Back Issues, F+W Media Products, 700 E. State St., Iola, WI 54990. Please specify publication, month and year.

A Simple Brace that Doesn't Ratchet

The "Southern Table" and "Mystery Mallet" articles in the April 2012 issue (#196) both include photos of an interesting brace. It's certainly a dead-simple mechanism – what is the make and model?

I have a pair of North Bros./Stanley 2101A braces and a Stanley 810 that are a pleasure to use, but I like the looks of this brace, too. I hope it's affordable and not a collector's tool.

If you have some suggestions for good braces and also eggbeater drills, I would be most grateful.

Roy D. Wall
Lee's Summit, Montana

Roy,
I'm using a Spofford brace (so is Roy Underhill), which is dirt simple. Like me, I suppose. You will also find them listed as "Fray" braces. And then Stanley gobbled them up and made them.

I've never had problems finding one for about $30, but that was about 10 years ago.

As to eggbeaters, I look for Millers Falls and Goodell-Pratt; those are two excellent brands. If the drill spins well and the chuck grabs tight then it is a good worker. Those qualities are more important than the brand.

Christopher Schwarz, contributing editor

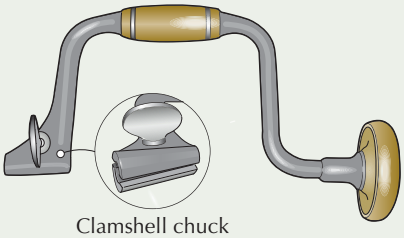

Clamshell chuck

Simple-to-build Tool-storage Solutions

I enjoy your "I Can Do That" column. I am a beginning woodworker and built the tool tote (from the November 2011 issue, #193) this weekend. The information on how to hold the chisel and how to cut the mortise was very helpful. I also appreciated being able to build the project from one board. I am loathe to risk $200 worth of lumber on a beginning project, but I am willing to spend $20 for the lumber for one.

I plan to build the "Gent's Tool Box" (from the December 2011 issue, #194) next. I have an 8x10 bedroom for a woodshop and a big tool chest just won't fit. A simple-to-build hanging tool storage system would be appreciated, as about the only place I have left to put my tools is on the wall. A workbench and tool storage seem the logical first projects for woodworkers setting up shop, but they are so often of such advanced construction as to be out of our reach.

Stephanie Suesan Smith
Hunt County, Texas

Is Poplar an Appropriate Wood for a Leg Vise?

I have a 2"-thick x 12"-wide piece of poplar. Will it work for a leg vise chop, or should I look for a harder wood?

Philip Hopper,
via e-mail

Philip,
Poplar is fine for a leg vise (though it's not always the most attractive wood). But 2" is a little on the thin side for the species; consider laminating a 3/4" liner on the inside, and that should do the trick.

Megan Fitzpatrick, managing editor

Thanks for 'Just Plane Round'

I appreciated Charles Bender's "Just Plane Round" in the February 2012 issue (#195). It's basic as a project, but it provides many good lessons.

Tom Buhl
via e-mail

Boarded Furniture Offers An Encouraging Point of View

I just read Adam Cherubini's article in the April 2012 issue of *Popular Woodworking Magazine* (#196). Good work. I enjoyed it very much.

I have been doing amateur woodworking for a couple of years (hand tools only) and am constantly on the lookout for projects that can be made without dovetails (or mortise-and-tenon joinery). The article is an inspiration because it encourages me to find my own way amongst those who insist that sophisticated joinery is a must – and all else is a bust.

I know that fine furniture can be made with simple joinery because my late father-in-law, Cy Wormald, did it all the time. Dowels, butt joints, squared nails and glue were his watchwords. Infrequently, he used mortise-and-tenon joinery, but there was never a dovetail to be seen. Twenty-five years later, the furniture looks as good as ever. He was trained as a boatbuilder and could be seen building almost everything in his cold, barely heated garage each winter.

I look forward to your future articles of this type.

Rod Fraser
via e-mail

Dovetails: The Better Choice

Nice article on the James Krenov-inspired piece in the April 2012 issue (#196). I especially like the use of tapered sliding dovetails. I think that's a sounder joint than the dowels Krenov was so fond of (though on some of his curved-side pieces, dowels would be my go-to choice).

CONTINUED ON PAGE 10

ILLUSTRATION BY MARY JANE FAVORITE

CONTINUED FROM PAGE 8

I hope you continue to do more pieces inspired by contemporary woodworkers.

Robert Troup
via e-mail

'Hanging Shelves' Inspiration

I like Megan Fitzpatrick's "Hanging Shelves" project in the April 2012 issue (#196), and am wondering about the inspirational source.

In the opening paragraph, it's mentioned that the inspiration piece is dovetailed in construction and was made circa 1775-1825. Would it be possible for you to direct me to the text and images for the period piece?

Adam Chilenski
via e-mail

Adam,
The "inspiration piece" was found on Prices4Antiques.com – a subscription reference database that catalogs the sale of thousands of items sold at auction each year. That piece sold in 2009 for $176, from Garth's Auctions in Delaware, Ohio. Here's the information the site provided:

"A made-do [hanging] bookshelf. English, late 18th or early 19th century, oak. Originally a scrub box with a dovetailed case and semicircular [arched] crest [with a circular hanger over two shelves]. Old dark finish.

19" high by 8" wide
Origin: England
Year: 1775-1825."

Megan Fitzpatrick, managing editor

What Can be Done to Mitigate Rust in Humid Shop?

I live in Minnesota, and my son, Ross, lives in Alabama. Last year when I visited him in February, he had rust on some of his tools. He had used Saw Saver on his table saw (as I do), so we tried it on his medium shoulder plane. It took the rust off, but not the black marks. And now the rust is back.

We are thinking of moving to the South to get out of northern winters, but humidity combined with woodworking tools now has me concerned. Do you have any hints on tool preservation – things that don't require a major decontamination before touching the tool to wood?

Greg Beamer
via e-mail

Greg,
Most of the tools I own get used on a regular basis, and I wipe them down after every use with jojoba oil. So I (thankfully) don't have too much trouble with rust. I did, however, inherit a number of vintage tools from my grandfather that required a lot of attention.

For massive amounts of rust removal, I've had good results by soaking the metal in Evapo-Rust, after which most of the rust rinses off in water – along with some judicious rubbing using a green Scotch-Brite pad. (And of course, after rinsing, I immediately dry the metal and apply oil.)

For stubborn spots, I work through three grits of Sand-Flex blocks to scrub the offending areas.

If I needed to apply long-term protection to a tool, I'd likely smear it with a thin coat of petroleum jelly or paste wax – but you'd have to remove that before the tool touches the wood.

So if you don't want to have to clean gunk off your tools before you use them, my best advice is vigilance. Just wipe everything weekly with a non-drying vegetable oil. PWM

Megan Fitzpatrick, managing editor

ONLINE EXTRAS

Letters & Comments

At popularwoodworking.com/letters you'll find reader questions and comments, as well as our editors' responses.

We want to hear from you.

Popular Woodworking Magazine welcomes comments from readers. Published correspondence may be edited for length or style. All published letters become the property of *Popular Woodworking Magazine*.

Send your questions and comments via e-mail to popwood@fwmedia.com, or by mail to 8469 Blue Ash Road, Suite 100, Cincinnati, OH 45236.

Highly Recommended

Mirka's revolutionary Abranet mesh abrasive discs garnered one of our "Best New Tools" mentions in 2007 – and five years on, they're still my go-to sanding discs.

Unlike typical discs that have five or eight holes for dust extraction, Abranet is more like a drywall screen; dust gets sucked through the entire surface. Not only does that make sanding less messy, there's little clogging – and that means better sanding and longer-lasting discs. While the initial cost per disc seems high ($1 per at Amazon), they pay for themselves in longevity and cleanliness.

— Megan Fitzpatrick

POPULAR Woodworking MAGAZINE

Customer Service

How can I contact customer service with questions regarding my subscription, including a lost or damaged issue?
Visit popularwoodworking.com/customerservice. Or write to Popular Woodworking Magazine, *P.O. Box 420235, Palm Coast, FL 32142-0235. Or, if you prefer the telephone, call 386-246-3369 and a customer service representative will be happy to help you.*

When does my subscription expire?
The date of your subscription expiration appears on your magazine mailing label, above your name. The date indicates the last issue in your subscription.

Can I get back issues of *Popular Woodworking* and *Woodworking Magazine*?
Back issues are available while supplies last. Visit popularwoodworking.com/backissues. Or if you know the exact month and year of the issue you want, call our customer service department toll-free at 855-840-5118 to order.

What if I want more information about the projects and tools I read about in *Popular Woodworking Magazine*?
For all editorial questions, please write to Popular Woodworking Magazine, *8469 Blue Ash Road, Suite 100, Cincinnati, OH 45236. Or e-mail popwood@fwmedia.com.*

Does *Popular Woodworking Magazine* offer group discounts?
Group discounts are available by special arrangement with the publisher. For more details, send an e-mail to Debbie Paolello at debbie.paolello@fwmedia.com or call 513-531-2690 x11296.

Our Privacy Promise to You

We make portions of our customer list available to carefully screened companies that offer products and services we believe you may enjoy. If you do not want to receive offers and/or information, please let us know by contacting us at:
List Manager, F+W Media, Inc.
10151 Carver Road, Suite 200
Blue Ash, OH 45242

Safety Note

Safety is your responsibility. Manufacturers place safety devices on their equipment for a reason. In many photos you see in *Popular Woodworking Magazine*, these have been removed to provide clarity. In some cases we'll use an awkward body position so you can better see what's being demonstrated. Don't copy us. Think about each procedure you're going to perform beforehand.

THE WINNER:

Easy Way to Biscuit-join Edgebanding

I edge-band plywood shelves with solid wood, attaching the edgebanding with #20 biscuits. It's no problem at all to hold the plywood shelf solidly while cutting the slot; that's what bench dogs and an end vise do so well. But the edgebanding itself can be a little squirmy, either bending or rotating when held between dogs or slipping if held by the ends in a vise.

I finally realized I could use the Veritas Wonder Pup (#05G10.03 at leevalley.com) to capture the edgebanding between the Wonder Pup and a dog while another dog kept the edgebanding from rotating. With the biscuit cutter registering off the benchtop, this setup is nice and secure.

James Quinlivan
Torrance, California

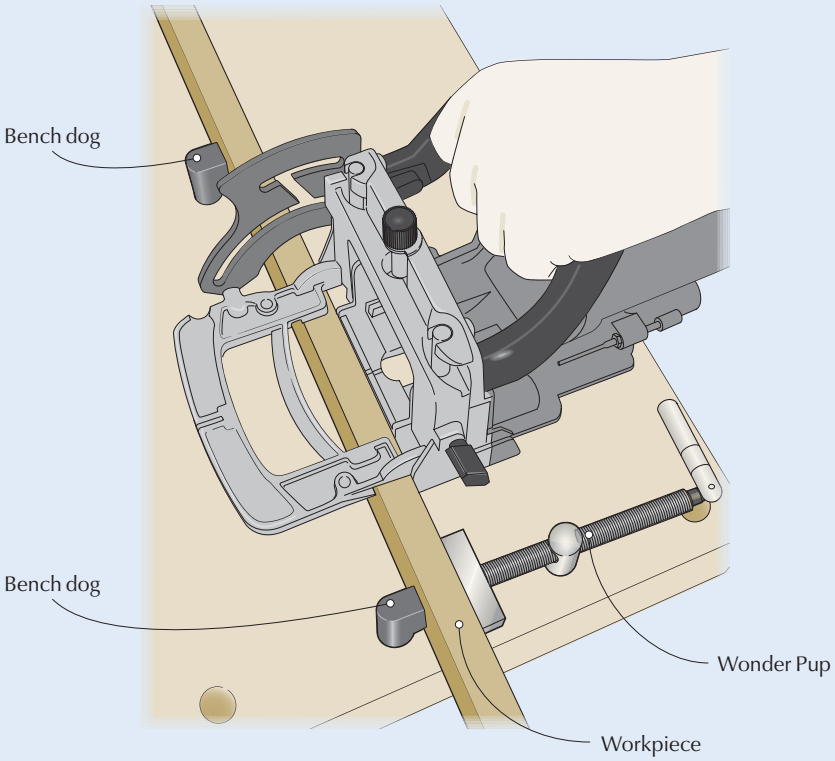

'Case Sticks'

Here's a handy homemade tool that is indispensable in my shop. I call them "case sticks" but I have also seen the tool referred to as slide sticks.

In my work I find that using tape measures and rules can, if one is not careful, lead to errors down the road, and so I employ my case sticks when calculating inside measurements on anything from drawers to case pieces, from dividers to tenon shoulders. I made three different sizes that are handy and can gauge measurements up to 25" or so.

A case stick is a simple yet effective device made up of two small blocks of wood with identically spaced 3/8"-diameter holes. In opposing holes of each block I inserted a length of 3/8" fiberglass rod (though wood or aluminum would work just as well) then I use set screws to lock them in place. In the other opposing holes that hold the other rod, I tapped holes for thumbscrews, which I made with brass machine screws and knurled knobs. These lock the rods in any position after sliding the blocks toward each other to gauge an opening. I use the case sticks in conjunction with sliding stops on my saw and my cuts are always right on the money.

Charlie Moore
Charleston, South Carolina

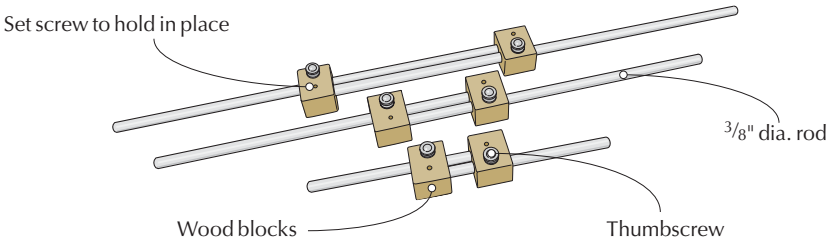

Rolling Inlay into Grooves

Small wooden seam rollers from my local wallpaper store work great for pressing string inlay into grooves.

Chuck Bender
Pottstown, Pennsylvania

ILLUSTRATIONS BY MARY JANE FAVORITE

Shop Vacuum Floor Nozzle

Don't you just hate it when the floor cleaning attachment on your shop vacuum sucks itself down to the floor and hangs on like grim death?

Well, here's a trick to keep that from happening. Make a pair of hardwood "skids" and attach one skid to each side of the nozzle to raise it approximately 1/8" above the floor. Now, the nozzle will just glide over the floor and debris, picking up everything in its path.

I used screws to fasten the skids to the nozzle so they can be replaced as required. Less clearance to the floor can be fine-tuned by rubbing the assembled skids over a sheet of sandpaper on a flat surface.

John Cusimano
Lansdale, Pennsylvania

Keyhole Slots

I've been frustrated more than once attempting to mount items such as cheap plug strips and other items with keyhole slots in the back. You measure and drive the screws, but getting both screw heads into the slots is often frustrating.

My method eliminates the chance of a measuring error by directly transferring the distance.

One day I realized that calipers or a pair of dividers can be set to the spacing of the keyhole slots and then pushed into the mounting surface (in my case the inside part of the desk), giving me the perfect locations for driving my screws.

Bill Murr
Brooklyn, Maryland

Transfer measured keyhole slots to desired location & use caliper points to mark

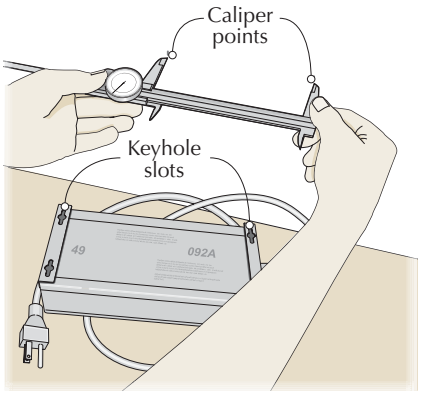

Rip the Center of a Board

When I needed to rip a workpiece exactly at the center on my table saw, it was a trial-and-error process – with too much error. I finally developed a simple method to find the distance between the saw blade and fence to rip the board exactly in half.

After doing some measuring and calculating, I came up with the following equations:

- D = 1/2 (W+B) distance from the outside of the blade to the fence
- D = 1/2 (W-B) distance from the inside of the blade to the fence

(D = distance; W = width of board; B = blade thickness.)

In this example, the board I want to rip in half is 1.54" wide, and my table saw blade is 0.10". Using the first equation above, I calculate D = (1.54"+0.10") = (1.64") = 0.82".

Using my caliper, I set the distance from the outside of the blade to the fence at 0.82". The blade will now be at the exact center of the board. Use the second equation for the distance between the inside of the blade to the fence.

Measure from the teeth of the table saw blade. PWM

Bill Wells
Olympia, Washington

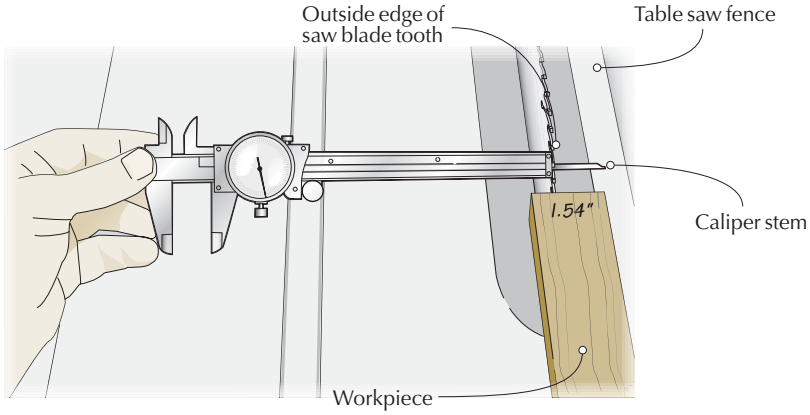

ONLINE EXTRAS

For links to all online extras, go to:
- **popularwoodworking.com/jun12**

tricks online: We film videos of many Tricks of the Trade in use in our shop, and post them online, free. Visit popularwoodworking.com/tricks to watch.

Our products are available online at:
- **ShopWoodworking.com**

Cash and prizes for your tricks and tips!

Each issue we publish woodworking tips from our readers. Next issue's winner receives a $250 gift certificate from Lee Valley Tools, good for any item in the catalog or on the web site (leevalley.com). (The tools pictured below are for illustration only, and are not part of the prize.)

Runners-up each receive a check for $50 to $100. When submitting a trick, include your mailing address and phone number. All entries become the property of *Popular Woodworking Magazine*. Send your trick by e-mail to popwoodtricks@fwmedia.com, or mail it to Tricks of the Trade, *Popular Woodworking Magazine*, 8469 Blue Ash Road, Suite 100, Cincinnati, OH 45236.

Lie-Nielsen Closed-throat Routers

This joinery-tweaking plane belongs in every woodworker's tool kit.

Even when I am in full-blown power, power, power mode in the workshop, there are two handplanes I turn to all the time: a block plane and a router plane.

Most woodworkers own a block plane, but only a fraction own a router plane, a tool I affectionately call "a chisel with a depth stop." Router planes are the ultimate joinery-tweaking tool. They get your tenons sized to perfection, your dados sunk to the desired depth and your hinges swinging sweetly. And with two new versions from Lie-Nielsen Toolworks, you now have a selection unheard of since World War II.

Lie-Nielsen now offers four router planes – two sizes with two different kinds of throats. The sizes are self-explanatory: The large planes are for full-size joinery and cutting deep recesses; the small routers are for hinge mortises and inlay. The different throats require more explanation.

An "open-throat" router has a hump in its casting right in front of the iron. This hump allows you to better see what you are cutting, but it prevents you from using the tool on the edges of narrow boards without modifying the tool's sole. A "closed-throat" router slightly reduces your visibility but it allows you to work on edges with ease.

Lie-Nielsen's two new routers have closed throats, which increases your choices and tightens the competition with Veritas of Canada, which offers only closed-throat routers.

The tweakers. *Router planes give you the power to do precision operations without a wildly spinning bit in a top-heavy power tool.*

So the question on the minds of many woodworkers is: Who makes the best closed-throat router? For the small routers, I think Lie-Nielsen is the winner. The small Veritas router has an iron with a round post that tends to rotate when the tool is used in heavy cuts.

For the large routers, it's a dead heat. Both brands offer fences that are largely unused by most woodworkers – a fence comes standard on the Lie-Nielsen and is an option on the Veritas. Both brands offer depth stops that work 10,000 times better than the depth stop on the traditional Stanley router. And both brands have a variety of blades.

Stop on a dime. *The bronze depth stop on the Lie-Nielsen router plane is light years ahead of the "depth suggester" on the old Stanley model.*

The Veritas comes with two blades for $139; the Lie-Nielsen comes with one blade (and the fence) for $140.

So the choice comes down to aesthetics and ergonomics. No matter which brand you choose, you'll be rewarded with more accurate joints. So add these tools to your "must-have" list.

— Christopher Schwarz

CONTINUED ON PAGE 16

Closed-throat Routers

Lie-Nielsen Toolworks ▪ lie-nielsen.com or 800-327-2520
Street price ▪ $140 (large) & $80 (small)

▪ **VIDEO** *See the easy way to sharpen a router plane's blade at popularwoodworking.com/jun12.*

Prices correct at time of publication.

PHOTOS BY AL PARRISH

CONTINUED FROM PAGE 14

Infinity Tools Thick-kerf, Flat-top Table Saw Blades

When we think table saw blades, our experience limits our thinking to rip, crosscut or combination, and 1/8" kerf or thin kerf. Then there's the number of teeth and type of grind: flat top, alternate-tooth bevel (ATB) or triple-chip. Each of these has its purpose and, if sharp, performs a dedicated task well.

Now, Infinity Cutting Tools offers a new table saw blade that cuts joints cleanly with just one setup.

These 8" blades come with 24 teeth in kerf widths of 5/32" and 1/4". They feature a flat-top tooth grind and a side grind to optimize tooth geometry for side clearance. This tooth configuration and grind makes clean, flat-bottomed cuts either with or across the grain in hardwoods, plywood, laminates and veneered panels. No more "bat ears" left by ATB blades or dado sets.

These blades are also perfect for cutting box joints, rabbets, dados and grooves at the table saw – no need to clean up the bottoms after. And if you are partial to using your table saw to cut tenons, these blades are ideal for cutting a joint with a shoulder equal to or more narrow than the blade kerf. All that's required for each shoulder is a single pass with the stock on end, supported with a jig riding the saw fence.

In addition to single blades, Infinity offers sets of blades and shims to space two blades apart for making various-width cuts or even make two box-joint cuts in one pass.

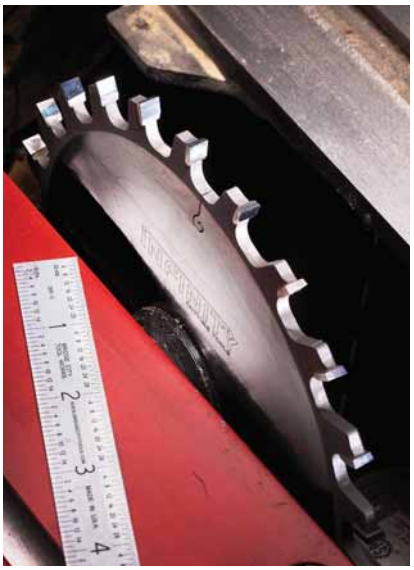

These specialty blades provide a solid solution for numerous table saw operations, and provide superior results while saving time.

— Steve Shanesy

Thick-kerf, Flat-top Blades

Infinity Tools ▪ infinitytools.com or 877-872-2487

Street price ▪ $79.90

▪ **VIDEO** *See an easy way to cut tenons using the table saw at popularwoodworking.com/jun12.*

Price correct at time of publication.

Lee Valley Knife Hinges

The first time I installed knife hinges I did so with an inexpensive pair, thinking it would be a good way to learn the process without wasting a lot of money on what is a notoriously finicky piece of hardware. Instead, I learned why quality knife hinges are worth every cent.

Any play or wiggle in the hinge will show up in the swing of the door, and making adjustments after installation is difficult if not impossible. Knife hinges made of thin, stamped steel, with irregularities in the thickness of the leaves or imperfections in the action of the pivot, simply won't function as they should. You can't pay me enough to use cheap ones again.

With that first set of knife hinges in mind, I was hesitant to try the new ones from Lee Valley. Once I got them in my hands, however, I was more hopeful. They have the weight and smooth action of quality hardware, and the brass versions are hard to distinguish from Brusso's (long the standard by which knife hinges are measured).

Likewise, as far as installation goes, I recently installed a few pairs of Brusso hinges and wouldn't walk across the street for the difference. Like the Brusso line, the Lee Valley hinges are available in straight and offset orientations and in a wide range of sizes. You have your choice of either brass or stainless steel. And they're priced notably less than comparable hinges from Brusso, which means Lee Valley will likely become my first stop for knife hinges.

If I have one complaint, it's that the Lee Valley hinges don't come with screws. It's not a huge problem with the brass hinges, but the stainless finish is akin in appearance to brushed nickel, so matching the screws is a challenge. While I love the look of the stainless versions, I wish Lee Valley provided matching screws. PWM

— Matthew Teague

Knife Hinges

Lee Valley ▪ leevalley.com or 800-871-8158

Street price ▪ $18.90-$39.80 per pair

▪ **ARTICLE** *Learn to install knife hinges at popularwoodworking.com/jun12.*

Prices correct at time of publication.

Sweat the Details

Small touches make a big difference in 'boarded furniture.'

In the details. *While this style of furniture typically has no carvings, veneer or even complicated joinery, it does have its own set of details that make it special.*

This article is part three in a series I'm doing on boarded furniture. If you are new to the series, boarded furniture is a style of case construction prevalent in early America, but largely ignored by we modern woodworkers. It is defined by the use of nails instead of dovetails or mortise-and-tenon joints. Built by part-time woodworkers or carpenters, these pieces typically reflect their builders' lack of time, tools and deep-pocketed customers. Successfully reproducing the charm and integrity of these pieces requires us to capture the subtle details, being careful not to overdo it. In this article, I'll finish up the little cabinet I'm making. In the process, I'll focus on the details that make this style special.

Underbevel

Beveling the underside of an overhanging top is a common detail. You'll see it on boarded furniture, certainly on modern furniture and it's fairly typical of Shaker furniture. Let's call it a poor man's cove moulding. It provides a transition between the vertical element and the horizontal elements. Additionally, it lends gravity-defying lightness to the top. It's easily accomplished with a sharp jack plane.

Mark the edges of the bevel with a pencil. I marked about 1/2" down from the top through the thickness. Then mark the bottom surface about 1" in from the edge. Plane until you hit both pencil lines – no fence required. Plane the bevels perpendicular to the grain first, being careful not to split out the wood at the end of your stroke (called spelching). Cut the long-grain bevels only after both cross-grain bevels are done. Remember this simple technique; we'll use it again to make the panels.

Nailed Drawers

Nailing the drawer together is fast and effective. Making it by hand requires the same precise stock preparation techniques that you'd use to make a dovetailed drawer. And because there's a lot more to drawer making than simply cutting dovetails, I think this drawer is a great opportunity to refine your drawer-making skills.

I began making my drawer by sawing out the front. I fit it to the opening to within 1/16" or so, just as I would with any fine piece of furniture. The ends of the drawer front must be rabbeted for the sides. I sawed the rabbets with a tenon saw. The inside bottom edge was rabbeted to receive the drawer bottom. I cut that with a rabbet plane.

I resawed stock for the sides, splitting 3/4" stock into 5/16" pieces. I don't structurally need thick sides. And I think the thin stock makes the drawer

PHOTOS BY THE AUTHOR

Underbevel adds style. *The bevel or chamfer under this top is a subtle feature, easily overlooked or skipped. It goes a long way to making this simple piece look less cheap and blocky. And that's the point here. You can pack in a lot of style with a few small details.*

Finger fence. *I'm cutting the rabbet for the drawer bottom with a rabbet plane. You've probably seen me do this before. I use my finger tips as a fence to control the width of the cut. When I get to my desired depth, I'll come back and clean up the width, holding this same plane sideways.*

Use what works. *A side bead plane works exceptionally well for rounding the tops of thin stock such as this drawer side – though that's not the plane's primary purpose. I consider the two planes I'm using for this piece, a 1/4" or 5/16" side bead (shown above), and a rabbet plane (shown at left), must-have tools.*

look a bit more refined. Frank Klausz once criticized one of my pieces saying I should have softened the tops of my drawer sides. "Make them nice for the hand," he said. He was right. Like the bevel under the top, once it's brought to your attention, you find it where you hadn't noticed it before. Almost every 18th-century drawer I've examined since has rounded-over drawer sides.

I glued my drawer bottom on. I resawed a piece of the same 1" x 12" white pine stock I've used throughout this project and planed it to about 1/4" thick. Restrained on all four edges, this bottom may well crack – but that wouldn't be the end of the world. This approach is simple and authentic (it's typical of mid 18th-century Philadelphia and Providence, R.I., pieces and it's found on many English pieces dating from the same period). If you want to play it safe, you could substitute plywood for the resawn plank.

Faux Panel Doors

One of the things that initially attracted me to this style of furniture was the faux panel doors I saw on a few pieces. My sense is that trade guild restrictions may have prevented these craftsmen from selling "joined" or mortise-and-tenon pieces. So they found a way to get a frame-and-panel look without mortises. The faux raised-panel doors were just a single wide board or tongue-and-groove panel framed with applied strips to look like the stiles and rails of a "joined" or paneled door. On at least one piece I saw, the strips were applied front and back. Bevels on the strips' inner edges alluded to the mouldings found on the real deal. The upper and lower pieces were just beveled to fit the sides' bevels.

RESAWING

Resawing is a task so laborious that I feel funny demonstrating it or writing about it. It's not often that I wish I had woodworking machinery. But without exception, each time I resaw I wish I had a band saw. A 1x12x 3' could take me 20 minutes of hard labor to resaw. And if you aren't careful and you lose your line, you can be left with unusable material. Here are some tips if you absolutely insist on resawing by hand.

1. Know that the width of the cut increases the effort exponentially. Stock that's 4" wide isn't too much trouble; 8" is easily four times more work. And 12"+ stock is pretty crazy. The good news is, this isn't something you have to do often.
2. Choose the coarsest and longest saw you have.
3. I start by sawing out all four corners. Then I try to connect the cuts, using the corner cuts to help guide the saw.
4. I'm most comfortable resawing horizontally (as shown). But when the kerf is long, it can fill with sawdust and slow the cut. Either clear the dust frequently or saw more vertically to eject the sawdust.

Crazy as it may be, resawing by hand is generally easier than thickness planing, though that's a calculation I always run through my mind mid-resaw. For a little piece of furniture like this, I think the resawn stock makes such a big difference to the look of the finished piece that it's worth the effort. — AC

Resawing refines. *The combination of thick and thin stock is important to keeping this furniture from looking blocky. Though resawing is hard work, this little piece greatly benefits from it.*

Finish

I think boarded pieces were typically painted. Period paints would have been oil-based lead paints, probably not milk paint. Still, I've found milk paint a decent substitute for old paint.

But for this piece, I've decided to use

Nailed. *The drawer sides get glued and nailed to the front's end grain. The back is just cut to fit from side to side and is similarly glued in place. I'll tap the nails in after the bottom is glued on.*

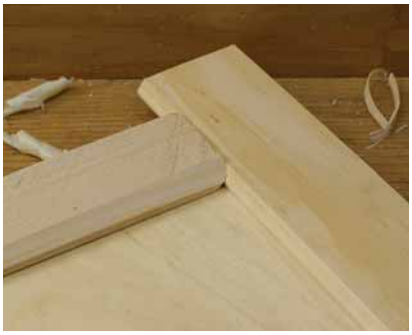

Trick the eye. *I glued on the "stiles" (right) first. Once the glue set, I beveled (coped) the ends of the "rail" pieces (left) with a chisel. I'm going to leave these rail pieces thick so I can plane them flush after the glue dries.*

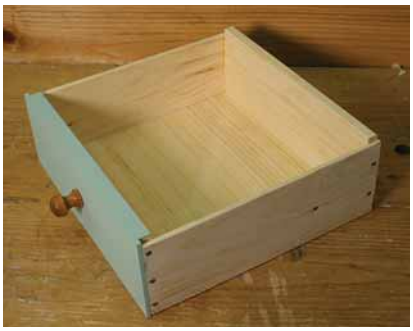

Works fine; looks good. *I think this is a handsome drawer, despite its lack of dovetails. I've noticed that 18th-century craftsmen often cut one fewer dovetail in the back of a drawer than the front. So I used one less nail in the back. The nails are nice and neat. The sides are thin and rounded at the top. At least for now, the bottom is plenty sturdy.*

Details. *With so little adornment elsewhere, the hardware you select contributes a great deal to the design. Pyramid head slotted screws help, too. Details matter.*

FILING NAIL HEADS

The drawer needs nails with heads to hold the sides properly in place. Rosehead nail heads are far too prominent and would damage the case each time the drawer was accessed. Tremont sells small button-headed brads. These are nice to use, but I find their heads a bit too domed. I've found I can file off the heads fairly easily and quickly. I don't need a lot of nails like these, so I really don't mind the extra work. And the finished nail head has an attractive irregular shape clearly distinct from a round headed wire nail. — AC

Good grip. *I use an antique hand vise to hold the nails while I file them. These old hand vises can be handheld or chucked into a wooden vise.*

interior house paint. My milk paint finish attempts to represent an old original finish. But all too often, boarded pieces come to us with many layers of paint on them – hinges, knobs and all. If you are looking to reproduce authentic "cottage style" pieces you may need several coats of a few different colors.

Hardware & Knobs

Exposed HL hinges weren't always used, but they are fairly typical. These hinges are easily sourced and easy to install. I'm using these hinges as decorative elements, though I'm not sure this is what was done originally. I think period makers typically painted over their hinges and hardware. I used pyramid-head screws to attach the hinges, but most old pieces I've seen used clinched nails to attach them.

I turned my own knobs out of cherry and made little attempt to get them to match each other. The individuality of details such as the knobs adds to the charm of this style of furniture. (I find this particularly fortunate because I am a poor turner.)

Conclusion

Though this style of furniture is desperately simple, its ingenious builders used their skill and creativity to produce a great amount of style with limited tools and effort. They made drawers without dovetails and paneled doors without mortise-and-tenon joints. They gave dignity to simple objects through the careful application of their craft. I hope someone will say that about my work someday. What else is there to woodworking? **PWM**

Visit Adam's blog at artsandmysteries.com for more discussion of traditional tools and techniques.

ONLINE EXTRAS

For links to all these online extras, go to:
- **popularwoodworking.com/jun12**

BLOG: *Read Adam's Arts & Mysteries blog.*

IN OUR STORE: *"The Arts & Mysteries of Hand Tools" on CD.*

Our products are available online at:
- **ShopWoodworking.com**

PowerLift.™

A Revolution In Table Mounted Routing.

The First Motorized Router Lift!

Perform true **Hands Free Plunge Cutting**. Raise the spinning router bit into the wood... *on the fly!* No cranks or handles.

• Pre-mounted 1/4" thick Aluminum Router Table Insert

Only The PowerLift...

has a bi-directional **Electronic Foot Pedal** that allows you to make micro-adjustments to the spinning router bit (within .005") for maximum precision and ease.

Only The PowerLift...

has a **Digital Control Panel** (with mounting arm included), so you can set the speed, direction, and height of the lift.

• Make repeatable plunge cuts for mortises and dados. The built in **Depth Stop** sets the maximum height the bit can protrude above the table.

Only The PowerLift...

DC motor action allows you to change the router bit above the table... in a matter of seconds.

• Tap the footswitch to make incremental passes, achieving clean cuts without turning off the router.

WOOD® INNOV8 AWARD

• Make your table a mortising machine. A jig that controls the work piece up top, combined with raising the spinning bit via the footswitch yields perfect mortises.

PowerLift • #9450 ..... $389.95

See PowerLift™ & Table Combos at MLCSwoodworking.com

"Creative Joinery"

The Fast Joint System makes unique custom joints. Includes an aluminum jig, five clamps, two router bits, and bushings. The four template set includes heart, key, half-blind and thru dovetail joints. See additional 11 and 20 template sets at "**MLCSwoodworking.com**".

Four Template Set • #9411 ..... $169.95

"Top Table and Fence"

The customizable Router Table Top with Fence features a 24" x 32" tabletop, miter slot, T-tracks, high split 36" long fence, and Aluminum Router Plate with guide pin.

Tabletop, Fence & Router Plate
#2393 ..... $189.95

PowerLift, Tabletop & Fence
#2200 SAVE $40 ..... $519.95

"Cabinet Making Artistry"

Our "pro" 6 piece cabinet making router bit set creates raised panel doors, drawers and table tops. 1/2" shank bits include an undercutter or standard ogee raised panel, ogee rail & stile set, glue joint, drawer lock, and door lip. A wood storage box is included.

Undercutter Set • #8389 ..... $119.95
Standard Set • #8387 ..... $114.95

1-800-533-9298
PROFESSIONAL ROUTER BITS & WOODWORKING PRODUCTS

MLCS

FREE SHIPPING!
IN CONTIGUOUS USA • P.O. BOX 165 PW, HV, PA, 19006 *2012

CARD #81 OR GO TO PWFREEINFO.COM

Historic lineage. *With roots in ancient Ireland, this chair shares elements of both Welsh Stick chairs and Sam Maloof's iconic rockers.*

Irish Chair

BY DON WEBER

Building a throne for the common man.

I'm sitting here listening to Fiona Richie's "Thistle & Shamrock" radio show, thinking of an old friend, John Brown, from Ireland, and the ties between the Welsh and Irish cultures. I've been building Welsh stick chairs for ages, influenced by the ancient chairs in St. Faggon's Castle and those built by John, who recently passed away. I've always loved the old chairs of Scotland and Ireland; they're as rough as you get, but thrones nonetheless.

The Sligo chair, joined and pegged together, has its origins in the early 16th century. A sketch of this type of chair, dated 1832 from Drumecliffe, near Sligo, shows a three-legged, T-shaped seat with a crest piece attached to the top. Claudia Kinmonth, in her book "Irish Country Furniture" (Yale), describes the "Tuam chair" and mentions several reproductions made for Thoor Ballylee, the poet W.B. Yeats' Tower House in Dublin. Kinmonth tells us that the chair was made with no nails, screws or glue. What follows is my interpretation of this ancient chair.

I've taken the liberty of exchanging the flat-planked, T-shaped seat for a more comfortable Windsor-style seat, and I joined the front legs in a Maloofian style. The original chairs had a back carved out of a heavy timber. I've steam-bent the back plank and also the front legs. The original arms were cut out

Hot potato. *A come-along rigged to a 4x4 below the bench provides the power to bend the thick back just out of the steam box.*

Hold on. *A bracket and pipe holds the back to the form as it dries.*

LEAD PHOTO BY AL PARRISH; STEP PHOTOS BY SCOTT SCHOUSE; ILLUSTRATIONS BY ROBERT W. LANG

and pegged to the back as in the old ones. This is a scribe-and-fit chair; there ain't no square.

Big Bend

Bending a 2" x 7" white oak plank took a lot of manpower until I attached a 4x4 timber with an eye bolt through it to the undercarriage of my workbench and used a come-along to draw the steamed wood down to the form.

The form was made from three pieces of 2"-thick pine, band sawn to shape then bolted together. A piece of angle iron was lagged to the end of the form to attach it to the workbench, and a pair of arms with a piece of black pipe (salvaged from an old bar clamp) passed through holes in the arms to allow me to tighten the bent wood down to the form with wedges driven from underneath the pipe.

Another set of arms with a piece of pipe at top and bottom allowed me to slip the frame over the form with the come-along still attached to secure the other side of the bend. This allows me to release the tension on the come-along and remove the form from the bench when bending multiple pieces.

I try to do several pieces in the steamer at the same time to economize on fuel and in case any of the bending pieces fail. The front legs are bent on a similar form. When all the pieces from the steamer are bent, the forms with the bent wood on them are placed in a drying room I've built in the workshop – the only climate-controlled space in my old building!

Have a Seat While You Wait

I let the bent wood dry for at least two weeks to limit the amount of spring back. While I'm waiting, I work on the seat. The seat is D-shaped with a tail and wings, and made of spalted elm. The tail will be mortised through the center of the back plank, and the wings notched past the sides of this piece.

I carved the seat bottom with an adze and travisher to a depth of 1/2"

SHAPE THE SEAT

Quick work. *An adze is used for the initial hollowing of the saddled seat.*

Strong back. *A through-tenon connects the seat to the back of the chair. The back will be notched to capture the edges.*

Smooth bottom. *A travisher removes the adze marks and refines the shape of the seat.*

THE BODGER'S STEAM BOX

Full head of steam. *A gas burner boils water to charge the plywood box with steam. This setup is inexpensive and very efficient.*

I recall reading an article in a woodworking magazine about a very patient Japanese temple builder who bent living trees with cables and winches to create curved timbers for his temple structures. This is kind of like that, but on a much smaller scale.

The steaming box I built is 6' long and $11\frac{3}{4}$" square, made from one sheet of $\frac{3}{4}$" plywood. I varnished the inside to keep it from warping from the steam, then glued and screwed it together. The back of the box is screwed in place and the front is hinged for access. This box sits on a rolling table over a boiling pot of water. A piece of $\frac{3}{4}$" copper pipe diffuses the steam inside the box and a T-joint fitting protrudes out the bottom of the steamer and through the plywood lid of the boiler.

I use a burner from an outdoor cooker to heat the water. The rule of thumb for steaming is one hour per 1" of thickness. The larger pieces are left in the steamer for $2\frac{1}{2}$ hours. Once steamed it's a mad dash from the steamer to the bending form, so the closer you set up your operation the better.

In the 12-gallon pot, I add about 10 gallons of water. I've had the water boil out, so I've added a filler hole (and plug) in case the water gets low so I can add boiling water from another pot. Keep a stick handy to measure the depth of the water so that you don't run out. —DW

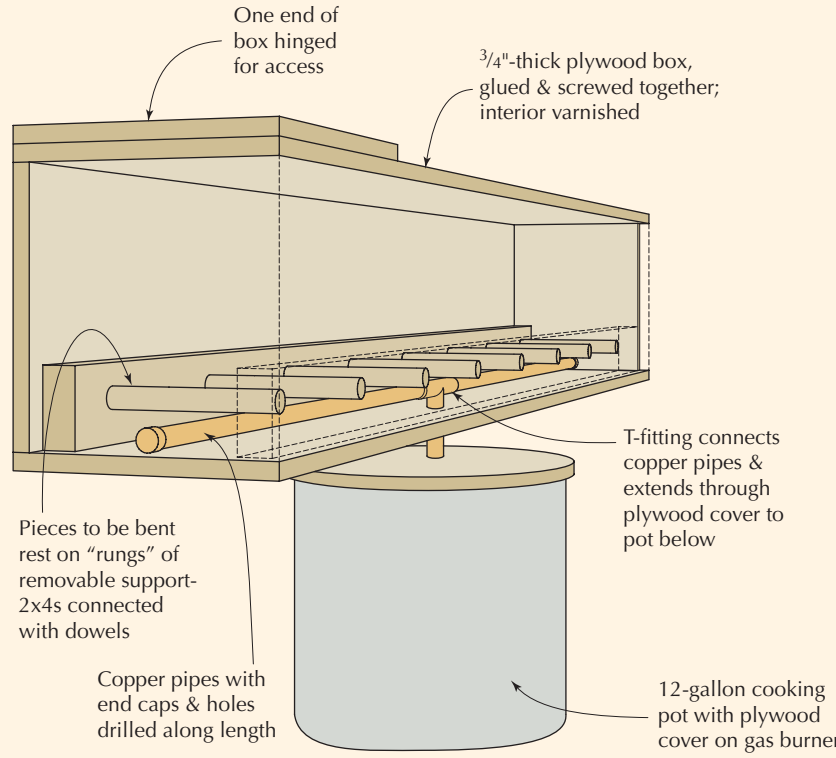

STEAM BOX

at the back of the hollow of the seat. But you can grind away at it with an Arbortech or an abrasive wheel. The bottom of the seat has a bevel 1" in and 3/4" high around the bottom perimeter. A plane and a spokeshave can bevel the bottom nicely, if you prefer.

The tail or tenon on the seat is 2" square and 4" long. This allows enough room for a mortise behind the back to hold a wedge that secures the chair together. To lay out the angle of the through-mortise in the back, I first traced the bent profile of the 2" x 7" piece (which we'll call the back blank) on a piece of 1/4" plywood. Then I measured up from the bottom edge 17 1/2" at the bend, and 18" up on the other edge of the plywood.

This gives you a 1/2" drop in the seat that leans you back when you sit down in the chair. If you carry this line across the plywood, when you place your back plank along the traced profile, you can bring the line up the face and the back with a framing square, whatever the thickness of the seat. The arm rest location is 9" up from the seat mark. Tuck your story board away for future chairs.

> "Dare to be honest and fear no labor."
> — *Robert Burns (1759-1796)*
> *The Bard of Scotland*

What Would Sam Do?

When I first built this chair, I used a tapered dovetail cut into the sides of the seat to house the front legs; my thinking was that they would tighten in time with the weight of the sitter. The problem was that over time, the legs shrunk more than I intended and the seat began to drop. So, inspired by Sam Maloof's joinery I redesigned the legs with a housed notch cut into the seat that would support the seat and allow shrinkage without exposing the joint.

The only difficult part of this joint is the cut to correspond with the bevel on the bottom of the seat. The trick is to cut the notches in the leg and the seat, then ease the leg onto the slot. When the leg can go no farther, use a pair of dividers to scribe the bevel cut. The notch in the leg is 1" deep and 1 1/4" wide. The notch in the seat is 3" from the front edge of the seat.

Once the legs are seated it's time to work on the stretchers. With the legs clamped in place, measure between them to ascertain the length of the front stretcher. The stretcher is housed into

PREPARE THE BACK

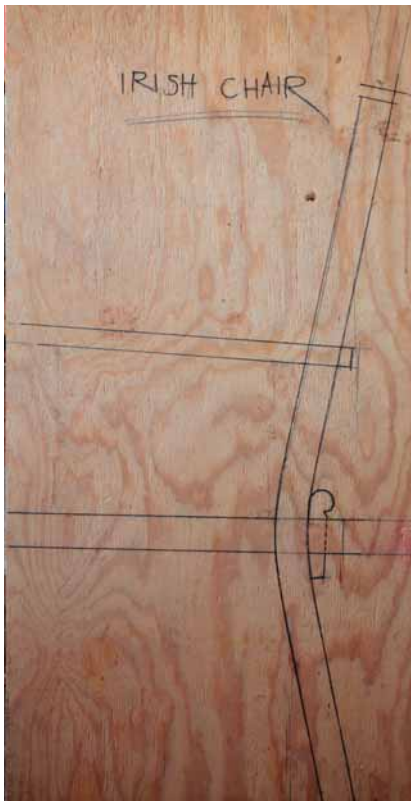

Big picture. *A full-size drawing on a piece of plywood starts with tracing the steam-bent back. All the dimensions for the other parts and the locations of the joints are then derived from that pattern.*

Right there. *The full-size layout locates the joint between the seat and the back.*

Coming through. *After removing the waste at the drill press, a chisel is used to square the mortise.*

Match play. *The notches in the front legs match the bevel angle on the bottom of the seat.*

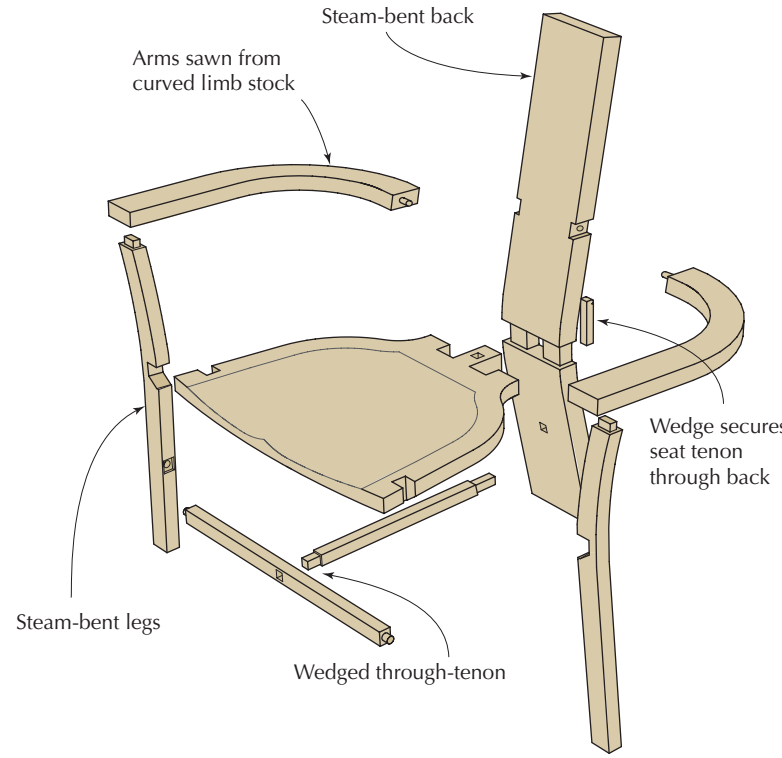

IRISH CHAIR – EXPLODED VIEW

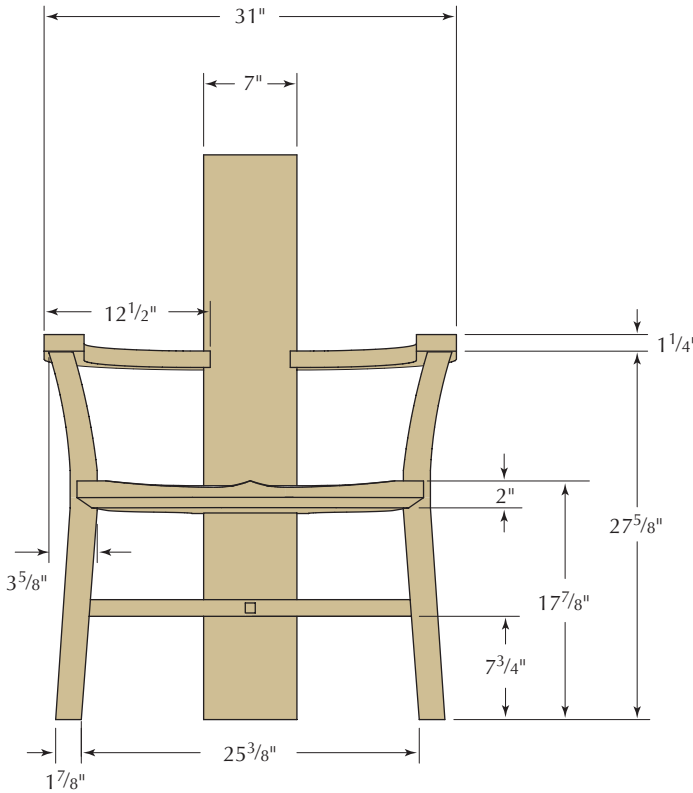

FRONT VIEW

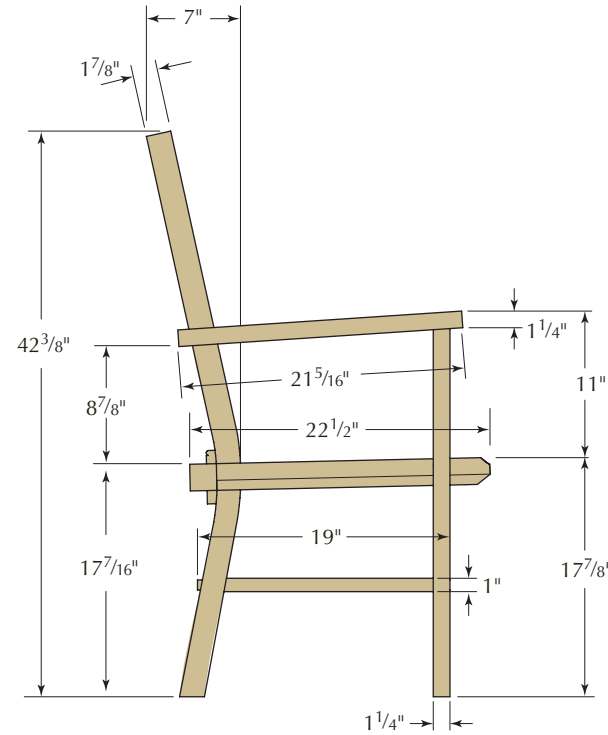

SIDE VIEW

the legs 1/4" plus the tenons which are 1" in length. I turn the tenons, which are 3/4" in diameter, on the lathe; they could also be cut by hand with a backsaw and chisel. All the holes are 3/4" diameter and 1 1/4" deep, 9" down from the bottom of the seat.

I set the front stretcher in the holes so I can locae the center hole in the back leg. Measure the distance from the back to the front stretcher to locate the center rectangular mortise-and-tenon joint. Once the mortise has been made, I remove the front stretcher and house the rear one. I cut the tenon on the table saw with a dado stack, because I'm working on several chairs at a time – but you can cut this tenon with a backsaw and clean up with a chisel.

Fit the T-joint together, insert the round tenons in the holes on both the front legs and scribe around the ends of the stretcher for the housing cut to a depth of 1/4".

Clamp 'er up and see how she fits. When the frame fits good and tight, I trim the feet to level the chair. My method of leveling a chair is to measure up from the workbench surface to the front edge of the chair which should be 17 1/2" to 18". The seat should drop at least 1/2" at the back. I adjust the height with wedges until all is right. I then measure the difference and make a spacer that I will use to scribe around the bottoms of the feet to get the chair to fit flat on the workbench.

To a T. *A single stretcher connects the front legs, and an additional stretcher joins the center to the back.*

Back to Nature

Now to the arms. The first Irish chair I built had a steam-bent arm (the same one I use on my Welsh Stick Chair), which was a 58"-long white oak stave that was 1 1/8" thick x 1 1/2" in width. The bending form I use has a winch-type system to pull both ends of the arm stock at the same time. If you are not inclined to take on this bend as well, the arms can be cut on a band saw and attached to the back with a tenon or lapped across the back.

This chair has wide, sawn arms to go along with the heavier seat, so I was concerned about short grain. A curve cut from a straight-grained piece of timber will have short grain somewhere, leaving a weak point in the arm.

To eliminate that problem I look for timbers with a natural curve – a large-diameter bent branch or a tree that has grown out of the side of a hill. These will naturally have the grain following the curve of the bend and no short grain to cut through. Also, you often get curly grain along the inside of the curve.

I have a Wood-Mizer sawmill so cutting these timbers is not a problem for me. A good-sized band saw can also be used to rip the timber in half, then into 1 1/4" planks. A log 8" in diameter will get you at least four sets of arms.

The arms are notched into the back of the chair and secured with 1/2" hickory or hedge apple pegs. I lay the arm on top of the arm stump (the portion of the front leg that extends above the seat). Then I mark out the notches 9" up from the chair seat on either side of the bent back. If you lay the arm alongside the tenon in the arm rest stump, you will get the correct angle for the notch.

Natural fit. *The arms are cut from a curved branch; avoid short grain where the arm bends.*

Tenons with a twist. *At the top of the front legs, the tenons are set at an angle to match the arms.*

Custom Fit

With a backsaw and a chisel, I cut the notch 1/2" into the back plank. When you have the arm fitted into the back, you can then swing the arm around to center it on top of the arm-rest tenon and scribe around this tenon onto the bottom of the arm.

To make the mortise, bore a hole with a 3/4" Forstner bit to a depth of 1/2" then square the hole with a chisel to the scribed lines. A 1/2" hole is drilled into the back end of the arm; a dowel center can then be used to locate the hole in the back plank for the peg to be glued into. Once everything comes together, glue and clamp all the joints.

When the glue is set, I shape the arms with a Japanese rasp, spokeshave and cabinet scraper. When I'm happy with the final shape, I bore down through the arm into the stump and drive a 1/2"-diameter x 3"-long peg into the hole, leaving at least 1/8" proud to be cleaned up later with a chisel. I cut in from four sides with a shallow-sweep gouge to leave a peak in the center of the peg.

After all surfaces are smoothed with a cabinet scraper, I give the chair at least three coats of oil varnish, or Minwax Antique Oil Finish. The first coat is thinned out with turpentine so it can soak well into the wood. When that first coat of oil is dry, I rub the chair down with #320-grit sandpaper, then I give the chair two more coats of finish. The last coat is rubbed out with a Scotch-Brite pad then a final coat of paste wax is applied. Polish the chair down, pull up the chair to the fireside and have a pint of Guinness with me. PWM

Don lives in Paint Lick, Ky., where he works with wood and wrought iron, and teaches both skills.

CARVING THE CELTIC KNOT

The Celtic knot carving on the headpiece adds decoration and identifies the chair as Irish. The knotwork I chose was from the Pictish school, probably from the "Book of Durrow." I found a book ages ago on Celtic knots titled "Celtic Art, The Methods of Construction," by George Bain (Dover). If you're game, you can work through the intricacies of your design or make a copy of the knot that suits you and enlarge it until it fits the piece you want to carve.

I taped the knot drawing and a piece of carbon paper on the work then traced over it, lifting the drawing every so often to check my work. I use a 60° veiner V-tool to incise the decoration. A light mallet and regular tapping allows you to progress around the curves. With practice it becomes quite fun. My carving took about 40 minutes to complete. Practice your carving on a scrap of tight-grained wood such as maple or cherry. Just remember to stop when the lines pass under a crossing line. — DW

ONLINE EXTRAS

For links to all these online extras, go to:
■ **popularwoodworking.com/jun12**

VIDEO: *Watch Don Weber split wood from a log.*

ARTICLE: *Read Don Weber's "Barnsley Hay Rake Table" article.*

WEB SITE: *Visit Don Weber's web site to sign up for a class in woodworking or blacksmithing.*

Our products are available online at:
■ **ShopWoodworking.com**

Oak & Mica Lamp

BY KEN BURTON

A blend of Arts & Crafts and Asian design influences.

East meets West. *The design for this accent lamp draws on both the Arts & Crafts era and traditional Japanese architecture.*

My design sense and influences are pretty eclectic. I draw on a wide variety of sources and enjoy mixing things up a bit. In keeping with popular culture, I think this is referred to as a "mash up." Today's young people are quite good at it, and sometimes like to think they invented the process. But as I think about it, people who design and make things have been doing this for years – taking details and ideas from one source and combining them with details and ideas from another.

Consider this lamp, for example. In some ways it is a fairly traditional design. It certainly recalls the Arts & Crafts style that was popular in this country about 100 years ago. In particular, I drew influence from the Greene brothers, architects who worked in and around Pasadena, Calif., designing and building some splendid examples of Arts & Crafts-style houses and furniture. But when you start looking into their training and design influences, you find that they, in turn, drew on other cultures for inspiration – notably traditional Japanese architecture. So in effect, they were "mashing up" things when they built such masterpieces as the Gamble House.

With all that being said, this little accent lamp will add a nice warm glow to almost any room regardless of the style of the rest of the furnishings. I chose to make mine in white oak with amber mica to play up the Arts & Crafts connection, but I think it would look stunning in a dark walnut with silver mica panels or even in curly maple with frosted glass in place of the mica. As you think about building this lamp, consider taking a few risks and doing a little mashing up of your own.

Construction is pretty simple, though you'll need to make some precise cuts. The top is mitered together, while the four frames that make up the

PHOTOS & ILLUSTRATIONS BY THE AUTHOR

Exact length. *Miter one end of each top frame piece first, then use an angled stop-block to control the length of the pieces when you make the second cuts.*

Both ways. *As you glue the top frame pieces together, you can tweak the fit of the joints by varying the clamp pressure. A piece of scrap plywood on top of the bottom set of clamps helps balance the pieces.*

Inside joint. *Rabbet the inside corner of each leg on the router table taking several light passes rather than one heavy one.*

Safe sled. *The toggle clamp on the tapering jig holds the leg to the taper sled. Make sure the clamp is clear of the blade and that it holds the workpiece square and secure.*

front, back and sides are assembled with lap joints.

Fabrication

Cut the pieces for the top frame to the thickness and width stated in the cutlist but leave them long for now. Set your miter gauge to 45° and cut the pieces to length, mitering them in the process. Use a stop to control the lengths of the pieces as shown above. Glue the frame together. Gluing mitered frames is a tricky business at best. I find using two pairs of clamps allows me to fine-tune the clamping pressure as shown above at right.

While the glue is drying, work on the legs. Cut them to length as specified in the cutlist, then chuck a 3/8" rabbeting bit in your table-mounted router and cut a 3/8" x 3/8" rabbet along the length of each leg as shown above. Taper the two adjacent, non-rabbeted sides of each leg. Each leg should taper from 1" square at the bottom to 5/8" square at the top. Make these cuts on the table saw, pushing the pieces through the cuts using a tapering jig.

Oak & Mica Lamp

	NO.	ITEM	DIMENSIONS (INCHES) T	W	L	MATERIAL
❑	2	Top frame front/back	5/8	3	12 1/2	White oak
❑	2	Top frame sides	5/8	3	9 1/2	White oak
❑	4	Legs	1	1	14	White oak
❑	4	Front/back stiles	3/8	1	12	White oak
❑	4	Side stiles	3/8	3/4	12	White oak
❑	2	Front/back lower rails	3/8	1	8	White oak
❑	4	Front/back upper rails	3/8	5/8	8	White oak
❑	2	Side bottom rails	3/8	1	4 1/2	White oak
❑	4	Side upper rails	3/8	5/8	4 1/2	White oak
❑	2	Center stiles	3/8	5/8	3 1/4	White oak
❑	4	Rabbet fillers	3/8	3/8	2	White oak
❑	1	Bottom	1/4	4 1/4	7 1/4	Birch ply
❑	2	Front/back mica	.015	7 1/4	11 5/8	Mica
❑	2	Side mica	.015	4 1/2	11 5/8	Mica

To set up the tapering jig, lay out the taper on one side of the leg. Hold the leg on the board with the layout line running right along the board's edge. Screw a fence and a stop block to the board to hold the leg in this position. Adjust the saw's fence to cut right

SUPPLIES

Asheville-Schoonmaker Mica
ashevillemica.com or 757 244-7311

My Lamp Parts
mylampparts.com or 773 539-7910

along the edge of the board. Cut each leg twice. Make the first cut with the leg loaded into the jig with the rabbeted corner up and toward the fence. Make the second cut with the rabbeted corner down and toward the fence.

When the glue on the top frame is dry, cut slots in the corners for splines to reinforce the joints. Set the table saw's blade height to 1½" and hold the frame in a cradle jig as you make the cuts as shown below. (If you need plans for a cradle jig, see the Online Extras.) Now tilt the blade on your saw to 11° and bevel the underside of the frame as shown below at right. The profile you are trying to create is shown in the front and side views below.

Cut the rails and stiles to the dimensions given in the cutlist. Make a few extra pieces you can use to test the joinery setups (and so you have extra on hand in case of a mistake).

The stiles and rails that make up the front, back and side frames are joined with lap joints. On all four of the frames, the outer stiles lap over the rails. On the front and back frames, the rails then lap over the center stiles. Cut the joints with a dado stack installed on the table saw. Rather than trying to match the exact width of the dado to the width of the pieces, I make the dado somewhat narrower (9/16") and then make two passes to make the cuts the width I need. Set the height of the dado to half the thickness of your rails and stiles (3/16").

Make the cuts on the stiles first. All eight stiles get the same three cuts – two 5/8"-wide notches near the top end and a 1"-wide notch at the bottom.

Spline the corners. *When cutting the spline grooves, clamp the frame in the cradle jig with its top surface against the jig's face and locate the slots 1/8" in from the top surface.*

Bevel the underside. *Run the frame on edge with the blade tilted to bevel the underside. Locate the bevel just below spline.*

> "To love beauty is to see light."
> — *Victor Hugo (1802-1885)*
> *French author*

The placement of the joints is shown in the "Front View" below. Make the cuts by passing the stiles over the dado stack using the miter gauge. Use a stop to keep the location of the cuts consistent from piece to piece.

For the top two notches, make one cut, then use shims between the end of the workpiece and stop (shown on the next page) to make the cut wider until the mating rail just fits in. For the wider notches at the bottom, you'll want to reset the stop to make the notch wide enough for the wider rails.

Notch the rails in a manner similar to the way you cut the stiles. The dimensions and placement of the rail notches are shown in the "Front/Back Rail Detail" and in the "Side Rail Detail" illustrations. Note: the drawing shows a 3/8" x 1/8" rabbet in the ends of the front and back rails. Don't worry about this yet. You'll cut it after the frames are assembled. Also notch the ends of the center stiles. Glue the stiles and rails together to make up the four frames.

Cut 3/8"-wide x 1/8"-deep rabbets along both sides and the bottom of the inside faces of the front and back frames with a 3/8" rabbeting bit in a table-mounted router (it's probably still in there from rabbeting the legs).

Glue the four frames together as shown at right. The edges of the side

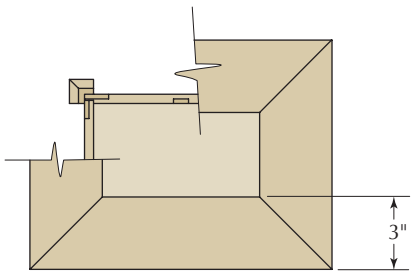

TOP VIEW

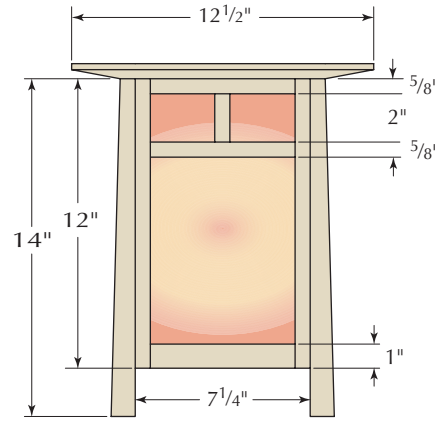

FRONT VIEW

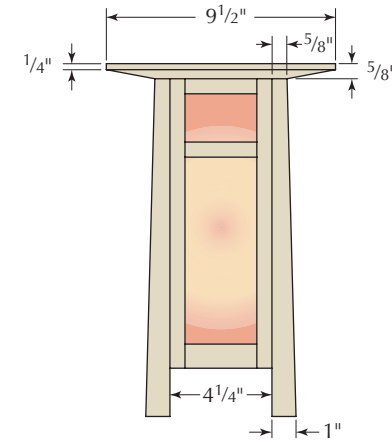

SIDE VIEW

Hole card. *Use a stop to ensure that the notches in the stiles are consistent from piece to piece. To make the cuts slightly wider, insert playing-card shims between the stop and the end of the workpiece.*

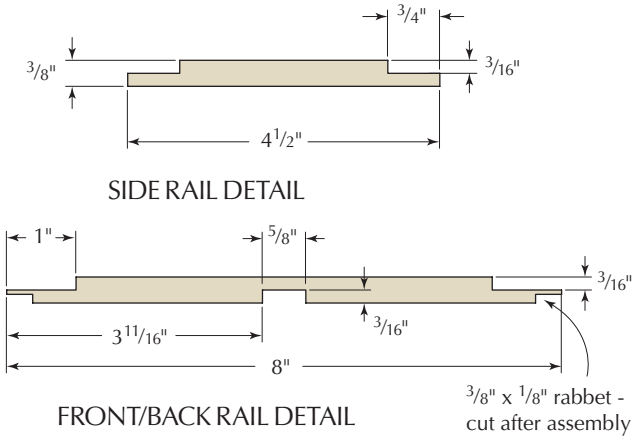

frames should fit into the rabbets you just cut in the front and back frames. Clean up any squeeze-out from the frame glue-up then glue the legs to the four corners of the frame assembly as shown below at right. Cut and glue four filler pieces in the rabbets at the bottom of the legs.

Cut a rectangle of 1/4" birch plywood to fit inside the frame assembly; it should fit into the shallow rabbet you cut in the bottom edges of the front and back frames. Drill a 13/32"-diameter hole through the center of the plywood, then glue it in place inside the frames.

Cut four pieces of mica to fit against the insides of the lamp. I find mica cuts well on the table saw. Use a fine blade and a zero-clearance throat plate to give the mica plenty of support. Glue the pieces to the insides of the lamp. The folks at Asheville-Schoonmaker Mica Company recommend epoxy for this, but I have also had good results with cyanoacrylate glue.

WIRE THE LAMP

As with any wiring project, if you aren't comfortable making the connections, consult with a licensed professional.

1. Push a 1/8" IP nipple through the hole in the center of the plywood and lock it in place with hex nuts.
2. Thread a socket base onto the nipple inside the lamp. Push a length of lamp cord up through the nipple and pull it out the top of the lamp.
3. Split the cord into its two individual conductors and tie an Underwriter's Knot to keep any strain on the wire from pulling against the electrical connections.
4. Strip the insulation from the conductors and attach them to the terminals on the socket interior. The ribbed wire should go to the silver terminal and the non-ribbed wire to the brass terminal.
5. Slip the socket shell and insulator over the socket interior. Pull the lamp cord back into the lamp and snap the socket into place in its base. — KB

Drill four 3/16"-diameter holes through the top frame for attaching the frame to the base. Counterbore the holes with a 3/8"-diameter bit to accept the plugs that will hide the screws. Position the holes on the front and back sides of the frame about 1 1/2" from the corners. After drilling 3/32"-diameter pilot holes, screw the frame to the base. Plug the holes with 3/8"-diameter plugs and sand them flush.

Finish the lamp with your favorite wood finish. I finished mine with Watco Danish Oil. Try to avoid getting the finish on the inside surfaces of the frames where the mica goes. PWM

Ken has been working with wood since 1984, and teaches in New Tripoli, Pa. This article is an excerpt from his book "Crafting Wooden Lamps."

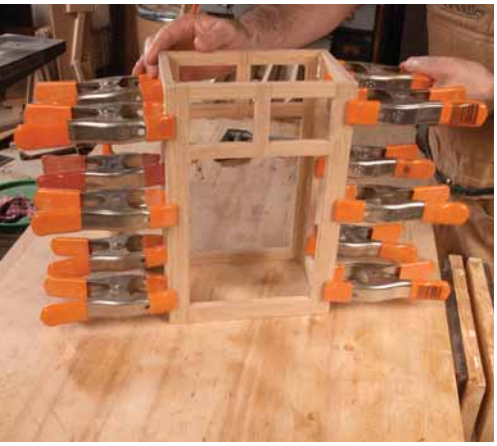

Fit the frames. *Glue the four frames together and check the assembly for square.*

Add the legs. *Glue the four legs to the outside of the frame assembly.*

ONLINE EXTRAS

For links to all these online extras, go to:
- **popularwoodworking.com/jun12**

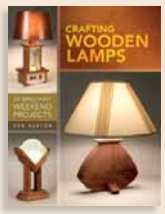

IN OUR STORE: *Purchase "Crafting Wooden Lamps."*

PDF: *Download plans for the cradle jig.*

ARTICLE: *"Shoji Lamp," by Christopher Schwarz.*

WEB SITE: *visit the author's web site at* **wrwoodworks.com**.

Our products are available online at:
- **ShopWoodworking.com**

Rabbets & Plows

Don't be intimidated by these essential joinery planes – a few tricks make them easy to use.

BY CHRISTOPHER SCHWARZ

Many woodworkers think planes that cut joinery are difficult to use, slow-cutting and complex to set up. Quite the opposite is true. If you can sharpen a block plane, you already have mastered the skill essential to using rabbet planes and plow planes – the two most important joinery planes.

In fact, when I teach students to use these planes, I usually have to ask them to stop making shavings at some point so we can all get back to work – the tools are quite addicting to use.

So why do most woodworkers opt for their router or table saw when cutting rabbets or grooves? I think it's because

PHOTOS BY THE AUTHOR

there is little information out there on how to set up these hand tools and – more important – how to hold them properly. This article will tell you everything you need to get started with rabbets and plows.

About the Planes

The rabbet plane and plow plane cut two of the most fundamental joints in woodworking. Rabbet planes cut rabbets, and plow planes cut grooves. There are some fairly complex combination planes out there that can be pressed into cutting both of these joints. If you have one of these tools, I recommend you seek out its manual in order to get started.

Each of these tools has an extended family of planes that have different features, or sometimes are used for different woodworking trades. While there is no way to cover all the variants, here's a quick and dirty lesson.

Let's start with the plows because they are easier to understand. While there are dozens of different kinds of plow planes – usually the difference is in how the fence adjusts – the tools work the same as all their kin. You select a blade that equals the width of the groove you want. You set a depth stop to control the depth. You set the fence to control how far away the groove is from the edge of the board. And almost all plows have these same three controls – though some don't have a depth stop.

Also in the plow family are "coachmaker's plows" and "circular plows" – both are tools used for grooving surfaces involving curves. They are uncommon in a furniture-maker's tool chest.

The rabbet plane family is, as one might expect from the sound of the name it shares with a certain mammal, rather large. What makes a tool a "rabbet" plane is that the tool's cutter extends out to one – or both – of the sidewalls of the plane. This allows the tool to cut into corners.

There is no way to cover all the types of rabbet planes, so let's discuss the ones you are most likely to encounter.

The "simple rabbet" plane is as basic as it gets. It's a block of wood, called the stock, a cutter that extends to the edges of the block and a wedge. The iron can be bedded straight or skewed in the stock. Straight irons are easier to sharpen; skewed ones cut cleaner when used across the grain of a board. One key feature is the escapement – the opening that ejects the shavings. Its special conical shape is key to the plane working well and is one of the major differences between the simple rabbet and its usually metal cousin, the shoulder plane.

"Shoulder planes" are metal rabbeting planes that are typically used for adjusting joinery instead of creating it from whole cloth. It doesn't have a conical escapement, so the tool tends to clog with shavings if used for making a rabbet joint. One note: Many people also think that the fact that the iron is bedded bevel-up is a big difference between the

Metal & wood. *Wooden plow planes throw the shavings onto your bench. Many modern metal plows throw the shavings into the fence's structure, where they can get in the way. I prefer tools that throw the shavings onto the bench.*

Rabbeting brothers. *The simple rabbet lives up to its name – it is a block of wood, an iron and a wedge. This one is 1 3/4" wide and its cutting angle is 45°. The shoulder plane is like the simple rabbet but without the conical escapement. It also is made to tighter tolerances. It is 1 1/2" wide and has a cutting angle of 47°.*

Complex animals. *This wooden Russian standing rabbet plane is designed to cut a rabbet that's 3/8" wide and that's it. The moving fillister plane has an adjustable fence and a nicker. This one also has a skewed iron. Note I've removed the front knob of this plane – your offhand should grasp the fence, not a knob.*

shoulder plane and rabbet plane. Not so. When all the math is complete, both the simple rabbet and shoulder plane end up with similar cutting angles. So don't get worked up about it.

"Standing rabbets" are planes that are almost identical to the simple rabbet plane, except for the fact that they feature an immovable fence (and sometimes a depth stop as well). This fence allows the tool to cut only one width of rabbet. It's handy for high-production work but not so much in the home workshop.

When you see the word "fillister" added to the name of a rabbet plane, it means that the tool has an additional knife-like cutter that scores the grain in front of the iron. This knife, called a nicker, results in a clean shoulder when working across the grain. There are standing fillister planes, but by far the most common fillister plane is what is called the "moving fillister."

> "Every tool carries with it the spirit by which it has been created."
>
> *— Werner Karl Heisenberg (1901-1976), author of the uncertainty principle, which says the more precisely you measure, the less precisely you know.*

The moving fillister is the most complex of all the rabbeting planes. It's called a "moving" fillister because its fence is adjustable so you can make rabbets in a variety of widths. It has a nicker, of course, and almost always has a depth stop. All these features make the tool look attractive to the beginning woodworker. The thing to keep in mind, however, is that the more adjustments you have to make, the more likely something can go wrong or slip.

Most woodworkers seem to congregate in two camps: those who use simple rabbets and those who prefer moving fillisters. Both tools have their advantages, which we'll discus as we learn how to use the tools.

Stock Selection

Before we can dive into the tools, let me say a word about selecting your wood. You cannot always plane with the grain with these sorts of tools. So it is always a good idea to pick the straightest stock possible for the rails and stiles of your doors and the parts that require rabbeting.

Even if you do get some tearing when working against the grain, it's usually no big deal because the tear-out is at the bottom of a groove or rabbet, which is filled with a panel or other mating piece. But always try to make it easier on yourself by selecting straight, mild material.

CUT A RABBET WITH A SHOULDER PLANE

You can cut accurate rabbets with a shoulder plane or a simple rabbet plane once you know a couple tricks.

Because these tools don't have a fence, you need some help to get the joint started. You can clamp a scrap-wood fence to your work and push the tool against that to get the joint started. That works, but it is slow.

The other option is to tilt the corner of the tool into a line left by a cutting gauge. Make a few strokes to widen the gauge line into a trench. Gradually tip the plane so the sole is parallel to the floor. Once the shoulder is established you don't really need a fence. Planemaker Matt Bickford taught me this and it works great. — CS

Use a scrap fence. *If you are having trouble freehanding your rabbet plane, try clamping a batten to the work. These aren't training wheels – some woodworkers work this way all their lives.*

Or, tilted then not. *Begin the rabbet with the tool's corner pressed hard into your gauge line. Take a few passes until you have a trench that allows you to begin to tilt the plane upright. If you have to clean up the shoulder at the end, you can tilt the tool on its side.*

Skews are tricky. *Getting a keen edge on a skewed iron isn't difficult, but maintaining the skewed angle is. If that angle changes as you sharpen, cut a block of wood with a 25° bevel on the end that's skewed at the correct angle (typically 20°). Clamp your iron to the block, then file the bevel using the wooden ramp as a guide.*

SKEWED OR STRAIGHT IRON?

One of the important choices you face when selecting a rabbeting plane is whether the iron should be straight or skewed. A straight iron is easier to sharpen than a skewed one. And the skewed iron cuts more cleanly than a straight iron when working across the grain.

But there is one more thing to consider.

A skewed iron tends to pull the tool against the work; a straight iron will not.

So if you have a moving fillister plane with a skewed iron, it is much easier to keep the fence against the work because the skew is pulling the fence against the work.

The skew can work to your disadvantage in a simple rabbet plane. Because there is no fence, it can be more challenging to start the tool without drifting across your layout lines. To get around this, I like to use simple rabbet planes with skewed irons against battens clamped to the work. —CS

Skew for you? *The skewed iron pulls the fence of this tool against the edge of the board, a handy feature.*

Sharpening & Setup

As I mentioned in the first paragraph of this story, sharpening these tools isn't difficult. If the plane's iron has a straight cutter, you can sharpen it as you would a chisel and even use a honing guide. For the bevel-down rabbeting planes, I recommend a 25° primary bevel with a 35° secondary bevel, which will make the edge robust.

If the tool has a skewed iron, I recommend you learn to sharpen it freehand. Yes there are skew attachments for honing guides, but I have found these fussier than just taking the hour or so it requires to learn the hand skills to do it freehand.

The good news is that the iron for a plow or a rabbet plane doesn't have to be nearly as perfect as the edge for a smoothing plane. Focus your attention on getting the edge dead straight or at the exact skew (20° is the typical skew angle). That is more important than being able to cleave atoms in twain.

One last important detail before we make shavings: When setting up any rabbeting plane, the iron needs to be proud of the body of the tool by a whisker. This allows the tool to get in the corner of the rabbet and keeps the shoulder of your joint vertical. You'll know when your iron isn't proud because all your rabbets will have a sloping shoulder. I know this sounds counter-intuitive. Give it a try and you'll see.

After the blade is sharp you need to set the tool to take the right kind of shaving. The goal is to take the biggest shaving you can manage without destroying your work or wearing yourself out. In soft woods and when working across the grain you should be able to take a shaving that looks more like a thick chip than a shaving. When cutting end grain, working in hard woods or planing against the grain, I recommend something considerably thinner – something between a smoothing plane shaving and a jointer plane shaving.

The Basic Strokes

Plow and rabbet planes aren't pushed on a board like a bench plane or a block plane. Whether you realize it or not, when you use a bench plane you end up skewing it this way and that to respond to the grain.

Using a plow or rabbet plane is a lot more like sawing than planing. The focus is on keeping the tool straight and steady. So let's first talk about what to do with your hands.

Your dominant hand pushes the tool forward, and nothing else. You shouldn't use this hand to tip the tool – just push forward. Most woodworkers have a difficult time learning this so I recommend they push the tool forward only with the palm – don't let your fingers grasp the tool. This looks ridiculous, but it gets your muscles used to the idea.

The other thing to keep in mind with your dominant hand is that your forearm should be directly in line with the body of the plane – never at an angle. This is a lot like sawing.

What about your off-hand? That's your fence hand. Its job is to press the fence against the work (and the workbench, as you will see). It also keeps the plane upright or tilted as necessary. It doesn't push the tool forward.

Keeping the tool oriented correctly with your off-hand requires a little practice, but it's fairly straightforward stuff. When you first begin working with your plow or rabbet

As thick as possible. *As you gain confidence and strength, you'll be able to rip off enormous curls with your tools. Until then, try thinner shavings or softer wood.*

Don't grab. *By pushing the tool forward with your palm, you eliminate the tendency of your dominant hand to tilt the tool. Once you get used to how the tool feels when it is oriented properly, you can hold the tote of the tool with your fingers.*

A little pressure. *My rabbets tend to be more accurate when I rest my wrist on the rear post. Try slightly different hand positions and observe the results (the joint, not the shavings).*

Begin at the end. *Small strokes at the end of the stick prevent you from making a fatal error. Each stroke should be a bit longer. When your strokes extend the entire length of the work you can really bear down and pick up speed.*

FLUSH TO THE BENCHTOP

When working with planes that have a fence, it's always best to clamp the board so its edge is flush to your benchtop. This gives the fence of your plow or rabbet an additional surface to bear against. This is especially helpful when making deep rabbets or working in thin material. —CS

Extra fence. *If the edge of your board is straight you can use your benchtop as an additional bearing surface for your fence. This adds a great deal of accuracy to the operation.*

plane, try resting your hand on the front or rear fence post of the tool. When I make rabbets, I find my results are better when I rest my wrist on the rear post. For my plow, I push my wrist against the front post.

Now you are ready to take a shaving. But before you plow forward there is one more important thing to know: You don't start the tool at the tail vise end of the bench and push toward the face vise – not at first at least.

Instead, when cutting a rabbet or groove with the grain, the first stroke should begin at the end of the board and be only a couple inches long. The next stroke is a little longer, as is each following stroke until you are taking full-length strokes. Then you proceed as normal until the joint is complete.

Why? These planes tend to follow the grain at times. And if the tool drifts significantly on the first stroke, you've botched the entire show surface of your work. If instead you begin with shorter strokes, you won't ruin the entire workpiece if the plane wanders – just a short section. And it gives you another chance to recover with your next stroke.

Once you have a good shoulder or groove started all along your board you can go to town with long-grain strokes.

These long strokes are also different than many other kinds of planing strokes. To keep the tool steady I recommend you lock your arms and push the tool forward by rocking your body, or stepping forward on long workpieces. Shifting most of the effort to your legs also allows you to plane for longer periods of time.

Working Across the Grain

When you plane a rabbet across the grain, such as when making a rabbet on the end of a board, there's even more to consider as you start the tool.

If you simply go to work with a simple rabbeting plane you will tear out the grain on the surface of the work. It's "game over" on the first stroke. So you need to either knife in the shoulder of the cross-grain joint first with a knife, or you need to engage the nicker in your fillister plane.

Nickers need to be set so they cut a little deeper than the iron and are aligned with the corner of the iron that reaches into the corner of the rabbet. In other words, the nickers should be just a whisker proud of the body of the tool – just like the iron.

Then, to begin the cross-grain rabbet, your first stroke is actually backward – from the far end of the board to the close end of the board. This reverse stroke allows the nicker to score the shoulder all the way along the joint. After scoring the shoulder, you take short forward strokes with each subsequent stroke getting longer – just like before.

How to Stop Your Tool

Once you get a rabbet or groove started, you need to have a way to stop. With a simple rabbet or a plow plane without a depth stop you should work to layout lines on both ends of the board. This sounds cumbersome, but it's really not. You quickly become a good judge of depth.

If your tool has a depth stop, it's a semi-brainless operation: Set the depth stop and plane away. When the depth stop contacts the work, the tool will stop cutting and you are finished.

But setting the depth stop flummoxes some woodworkers. Using a ruler on the tool isn't entirely accurate because the iron sticks out of the sole. Here's how I set the depth stop: I place the tool on the work and press firmly down. Then I set a little block of wood (or a previously cut joint) on the work and drop the depth stop onto it. If it's a 1/4"-tall block, the joint will then be 1/4" deep. For small adjustments or super shallow joints, try using business cards to set your depth stop.

The last and best piece of advice I can give you about these planes is to always check your work when you complete the joint, especially when cutting rabbets. One of the most common errors beginners make is to cut a joint that slopes on its wall, its floor or both. Check it by eye at first. If it doesn't look right, confirm it with a square. Fixing a rabbet is also great practice for cutting a rabbet from whole cloth.

Keep practicing and soon you'll be making tons of grooves and rabbets like, well, a rabbit. PWM

Pull back. *When cutting across the grain, pull the fillister plane back for a stroke or two before making a forward stroke. The reverse strokes allow the nicker to score your work and will give you a clean shoulder.*

Setting blocks. *For small adjustments, small blocks of wood or business cards are a more direct way than using a ruler to set the depth stop.*

Christopher is the editor of Lost Art Press, a contributing editor to this magazine and the author of "The Anarchist's Tool Chest."

SHARPEN YOUR NICKERS

Traditional nickers look like your thumb. The flat nail section of the "thumb" faces the work. The rounded pad of the "thumb" faces the plane's body. These are usually sharpened with a needle file. The tip of the thumb needs to be sharp enough to dig into the work to define the shoulder line of the joint.

Modern nickers look like a Frisbee with a beveled edge. The flat faces the work; the bevel faces the plane's body. These are easier to sharpen. Remove the nicker and rub the flat on your sharpening stones. —CS

Modern nicker. *The traditional nicker looks like the profile of a thumb. The modern one (shown here) looks like a Frisbee. Bottom line: Both need to be sharp and have their flat surfaces facing the work.*

ONLINE EXTRAS

For links to all these online extras, go to:
- **popularwoodworking.com/jun12**

VIDEO: *See the author cut grooves and rabbets both with and across the grain.*

WEB: *Learn about combination planes at the Cornish Workshop web site.*

BLOG: *Read Christopher Schwarz's blog on handplanes – five years' worth of free material.*

IN OUR STORE: *"The Anarchist's Tool Chest," by Christopher Schwarz.*

IN OUR STORE: *Read "Handplane Essentials," by Christopher Schwarz.*

Our products are available online at:
- **ShopWoodworking.com**

The 'Wright' Shaker Counter

BY GLEN D. HUEY

You don't need symmetry to build a period piece that pleases the eye.

If you joined the Shaker Hancock Bishopric in the early part of the 19th century, you may have had the opportunity to work with an outstanding craftsman named Grove Wright (1789-1861). Wright, along with his long-time apprentice, Thomas Damon, built the counter from which this piece was adapted.

In designing the counter, Wright chose an asymmetrical layout that differed greatly from the symmetry found outside the confines of the Shaker villages. Of particular note is the drawer arrangement. The counter front is divided into thirds. Four small drawers occupy one-third, while three wider and taller drawers fill the remaining two thirds. To my eye, this arrangement visually balances the two banks of drawers. The narrow section, busy with the four drawers, is equally weighted to that of the wider right-hand side with its three taller drawers. Also, this design, with no two drawer blades (also known as drawer dividers) meeting at the same location, allows each blade tenon to be long enough in length for added strength.

There are a couple other great attributes of this counter. Of the two known period counters, each has locks in the uppermost drawers. Locks indicate use in the Ministry – the one area in Shaker life where drawer locks were permitted.

A second feature on the original counters, and something I continued in this adaptation, are drawer sides and backs that taper from top to bottom. Tapered parts make it more difficult to execute the dovetails, but the resulting look is interesting because the narrow top edge of the drawer box catches your eye. Plus, cutting the dovetails is a fun and rewarding challenge.

Stock Up On 8/4 Material

On most post-and-frame furniture you expect the legs to be made from thicker stock. On this counter, thick stock is used for the vertical dividers and drawer blades, too.

The legs have a turned section at the foot, and stay true to Shaker design in that the turning is simple and straightforward. In fact, these legs could be shaped using hand tools. I, however, opted to use a lathe.

Begin by marking a line around each leg at 7 5/8" up from the floor, then saw each corner prior to turning to prevent damaging the shoulders. From those shoulders down, each leg is rounded and tapered from full diameter at the top to 1 1/4" at the floor.

Of the four legs, the two rear legs are mirrored in mortise layout. At the top and bottom of two adjacent square faces of each leg are 1/4"-wide x 1"-deep x 1 3/4"-long mortises. The two front legs have the mortises at the top and bottom, just as the rear legs do, and where the drawer blades meet the legs there are twin mortises. (When using a mortise machine, twin mortises are best created without changing your setup and simply reversing the legs in the machine.)

START WITH THE LEGS

Save the shoulder. *A simple saw cut at your layout line determines the shoulder and helps to keep it intact while turning.*

Mill the panel grooves. *Instead of drop cuts at a table saw, it's best to use a plunge router and fence to make panel grooves.*

OPENING PHOTO AL PARRISH; STEP PHOTOS BY THE AUTHOR; ILLUSTRATIONS BY ROBERT W. LANG FROM THE AUTHOR'S MODELS

After the legs are mortised, create 3/8"-deep grooves to accept the flat panels of the sides and back of the counter. Drop-cutting grooves using a table saw is not especially safe or easy, so use a router and 1/4" spiral-upcut bit, or a plow plane. Set a router guide fence to align your cut with the mortises, then lock it down and run the grooves from mortise to mortise.

Mill the vertical dividers to size, then add panel grooves to the back dividers. The front divider, with your layout matching the drawer blades, is mortised on the two opposite sides. Be sure to leave 1" of stock at the top and bottom for additional joinery, then mortise just as you did the front legs, reversing for the second mortise.

Joinery to attach the three vertical dividers to the top and bottom rails is unique in that a 1"-long tenon fits into the rails while the remaining material wraps behind the rails, except where the front divider meets the lower rail. I find it best to leave this step until the rails are complete to better fit the mortise-and-tenon joints.

Cut the rails to width and length. Lay out and mortise where the vertical dividers fit the top and bottom rails, including the center dividers on the ends. Because you have only 3/4" on which to work, and it's OK if you cut through the end of your rails, make panel grooves in the rails and end dividers. Use a table saw or plane, but skip the router setup. Also, tenon all ends to fit the leg or rail mortises.

With the rails done, complete the vertical divider ends. There are a couple setups required to create your tenons. Make the cuts at your table saw, then fit each divider in position. Run through a dry-fit to make sure all your joints fit snug and correct.

Drawer blades attach to the legs with the extra holding power of the twin tenons. If you have cut the mortises as suggested, then your tenons are easily formed. As you cut one side

ASSEMBLE THE CASE

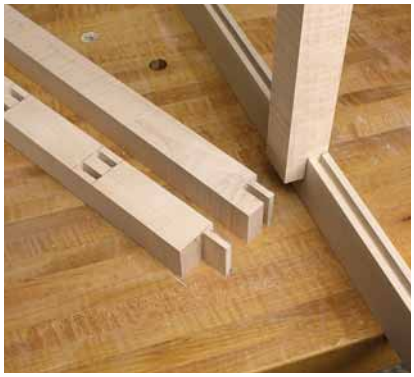

Twice as strong. *As the sole runner support, these dividers need strength. A screw through the back and a tenon in the rail gives the vertical dividers double the holding power.*

Tenon tweaks. *Dry assembly is the best time to discover that your tenons are too tight – not after glue is spread and things become messy.*

Another golden rule. *It's invaluable to test joinery setups using a scrap milled when your parts are milled. The twin tenons on the drawer blades can be fussy.*

Gravity helps. *After the glue dries on the back assembly, work the panels and frame of the ends into the the back. The lighter front is easily lifted into position.*

Strength & simplicity. *A thin bead of glue is all that's used to join the rail extension to your case. The L-shaped connection adds a lot of support across the counter's front.*

of each tenon you can simply reverse the part in your jig to complete the tenons. If you mortised differently, you may have to make small adjustments.

Dry-fit your case front to check the fit of the tenons and make any necessary adjustments. You need to assemble the parts in a specific order. Fit the vertical divider into the top and bottom rails, then slip in the short drawer blades before you attach the left-front leg. Pull everything tight. Install the long blades into the vertical divider, then attach the right leg. With your dry-fit complete, lay out and mark the areas where the drawer runners tenon into the rails. Disassemble the front, then set up and cut a 1/4" x 1" x 1/2"-deep mortise at each marked location. Assemble the front a second time as you

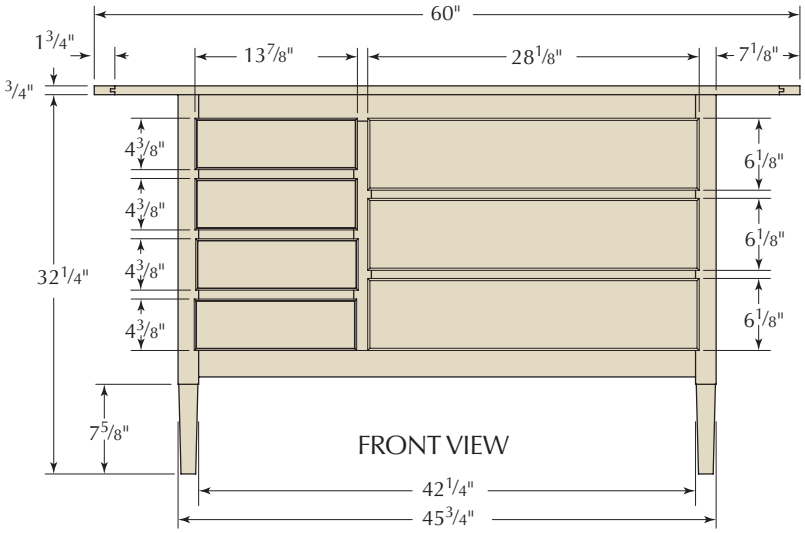

FRONT VIEW

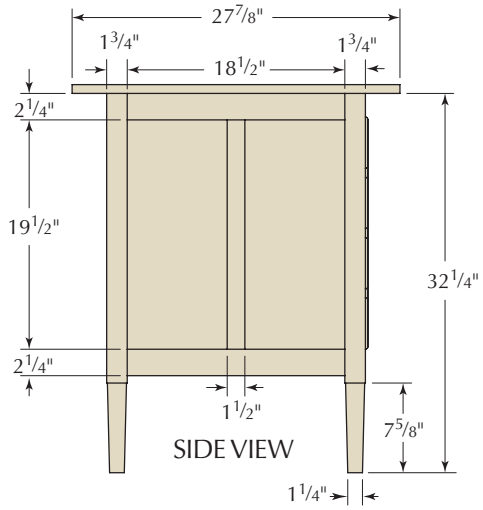

SIDE VIEW

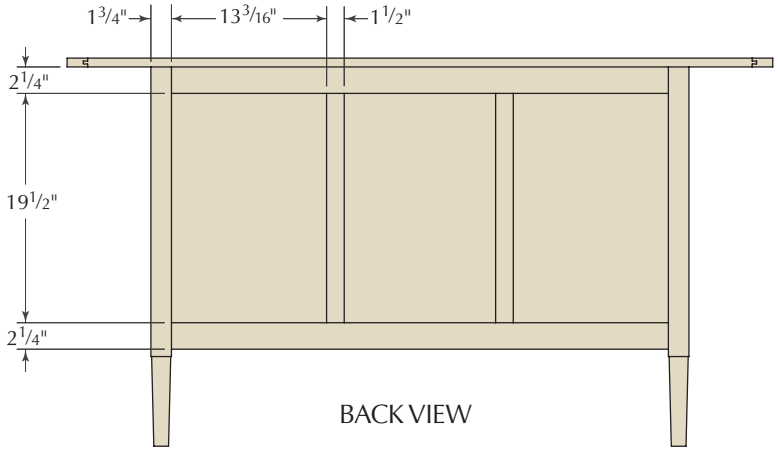

BACK VIEW

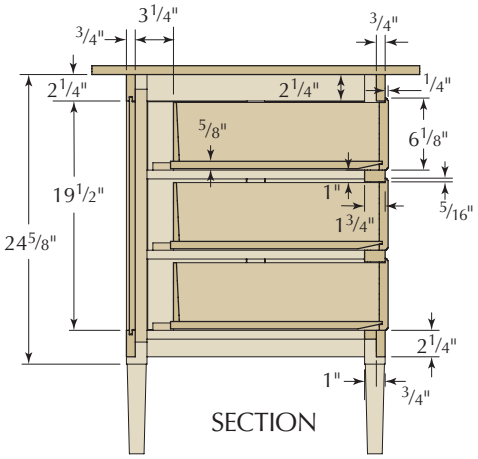

SECTION

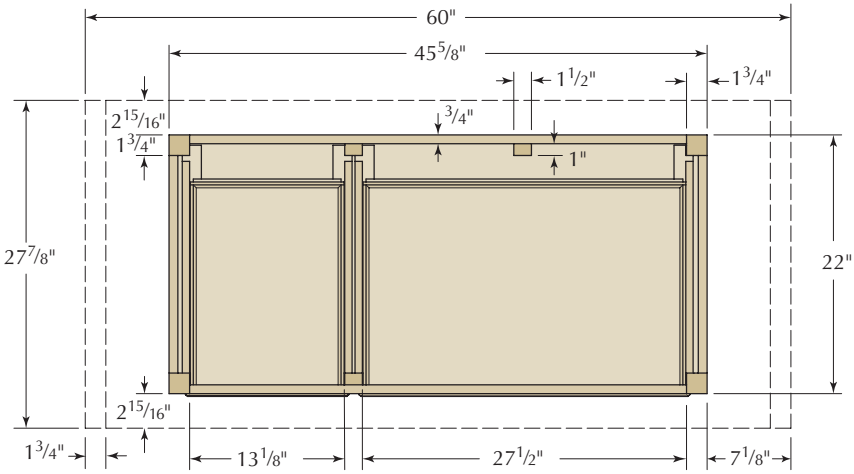

PLAN

SUPPLIES

Horton Brass
horton-brasses.com or 800-754-9127

3 ■ half-mortise drawer locks
#LK-2, call for prices

1 ■ 1/4 lb. clout or shingle nails
#N-7, call for prices

Woodcraft Supply
woodcraft.com or 800-225-1153

1 ■ Shaker Knobs, 1 1/4" dia.
#125433 (bag of 10), $9.50

Price correct at time of publication.

Keep a square handy. *Runners stretch from front to back inside the case; tenons are at the front with notches and nails at the back. Square each runner off the counter front.*

Keep it straight. *Drawer guides do not need to fit tight to the back, so a steel rule or straightedge is a great way to align them. After adding a bead of glue, 23-gauge pins act as clamps.*

glue the joints. Clamp the assembly and set it aside as the glue dries.

Before the back of the counter is assembled, make your flat panels. These are easy. Mill your panels to 1/2" in thickness, cut to the size of the openings plus 5/8", then create a 3/8"-wide x 1/4"-deep rabbet on all four non-face edges. After they're finish-sanded, the panels should slip snugly into the grooves. Glue the mortise-and-tenon joints but leave the panels to float freely as you assemble the case back. Allow the glue to dry before working the ends of the counter.

Assemble the end dividers to the rails and slide your panels into position. Then slip the assembly into the back unit making sure to glue only the joinery and again leave the panels free to move. Lastly, slip the front unit onto the case, add clamps and allow the glue to dry.

Get Inside the Case

The interior of the counter begins with the lower rail extension, which is set flush with the bottom rail's top edge. Cut the narrow piece to length and width, then fit the piece to your counter to locate and create the lower runner mortises. Glue the extension in place, and use a few spring clamps to hold things secure.

Drawer runners are 1 5/8" wide with a 1/4" x 1"-wide x 1/2"-long tenon at the front. Each tenon is offset fully to one side. The opposite end of each runner is notched to fit around a leg or vertical divider, depending on its location. All notches are the same regardless of the runner location, so batch-cutting is OK. Make sure your notch is on the opposite edge of the tenons.

Each runner has its tenon glued into the blade mortise and a drop of glue is added at the notch before being nailed in place. The process is easy but takes time due to the fact that it is necessary to work one level at a time in order to have access to attach drawer guides. Install runners into the lowermost positions, then glue and tack in your drawer guides before moving to the next level.

The guides are 18" long, 5/8" square stock. It's best to lay a straightedge from leg to leg (or divider to divider) to establish a line to which to set each guide. A thin bead of glue is the holding power, but I add a few 23-gauge pins to acts as clamps as the glue sets. You could use springs clamps instead.

Shaker Counter

	NO.	ITEM	DIMENSIONS (INCHES) T	W	L	MATERIAL	COMMENTS
❑	4	Legs	1 3/4	1 3/4	32 1/4	Maple	1" TBE*
❑	4	Long rails	3/4	2 1/4	44 1/4	Maple	1" TBE
❑	4	Short rails	3/4	2 1/4	20 1/2	Maple	1" TBE
❑	3	Vertical dividers	1 3/4	1 1/2	21 1/2	Maple	1" TBE
❑	2	End dividers	3/4	1 1/2	21 1/2	Maple	1" Twin TBE
❑	3	Drawer blades-short	1	1 3/4	15 1/8	Maple	1" Twin TBE
❑	2	Drawer blades-long	1	1 3/4	29 1/2	Maple	1" Twin TBE
❑	1	Panel-center back	1/2	13 3/8	20 1/8	Maple	
❑	2	Panel-outer back	1/2	13 13/16	20 1/8	Maple	
❑	4	Panels-end	1/2	9 1/8	20 1/8	Maple	
❑	1	Rail extension	3/4	1	42 1/4	Maple	
❑	14	Runners	3/4	1 5/8	19 7/8	Pine	1/2 TOE**
❑	14	Guides	5/8	5/8	18	Pine	
❑	1	Top	13/16	27 7/8	59	Cherry	1 1/2 TBE
❑	2	Breadboard ends	13/16	2	27 7/8	Cherry	
❑	4	Drawer fronts-short	3/4	4 3/8	13 7/8	Maple	
❑	3	Drawer fronts-long	3/4	6 1/8	28 1/8	Maple	
❑	10	Wooden clips	3/4	7/8	2 1/4	Oak	To attach top to case
❑	6	Pegs	1/4	1/4	1 1/4	Oak	

* Tenon both ends; ** Tenon one end

There is one tricky area where the lower set of runners fits on either side of the rear vertical divider. Nails driven to attach the two runners into the divider cross as they pass through the divider. Because of the counter's design, this happens only once.

More Than Just a Slab

Breadboard ends on the top are an important part of this project. The end overhang beyond the counter is substantial at 7". Without breadboards, there is a greater chance that the top would warp. Adding breadboard ends takes just a few steps that yield great results not only structurally but aesthetically.

With your top milled to thickness, length and width, set your marking gauge for the tenon length, or 1½". Mark the edges of the top and just onto both faces. To form a tenon at the end of my top, I use a straightedge (scrap plywood) to guide my router base. Measure the distance from the edge of the router-base to the edge of the router bit. Use that measurement from the marking gauge line to locate your straightedge. Lock the guide in position, set your depth of cut to ¼" then hog away the material. Repeat the steps for the bottom face of your top, then work the other end as well.

After your full-length tenons are formed, lay out for three individual tenons evenly spaced over the width of your top. Set your first tenon in from the edge about 1". I made the tenons 3½" wide and set the middle tenon centered to the top, but these numbers can be adjusted. An important part of this joint is to incorporate a ¼"-long tenon that runs the entire length of the top. This technique builds strength and increases the likelihood that your top will stay flat. (Check out "Online Extras" for a video on how I lay out and cut these tenons.)

Mill the material for your breadboard ends, then set up for and cut a ¼"-deep groove that matches the thickness of the tabletop tenon. When you achieve a snug fit, position the breadboard flush to the table's front edge and mark the location of each full tenon.

MAKE BREADBOARD ENDS

Breadboard ends not only help prevent a tabletop or other panel from cupping or warping over time, they also lend a refined look by covering the end grain and highlighting the pegged mortise-and-tenon joinery used to secure them in place. — GH

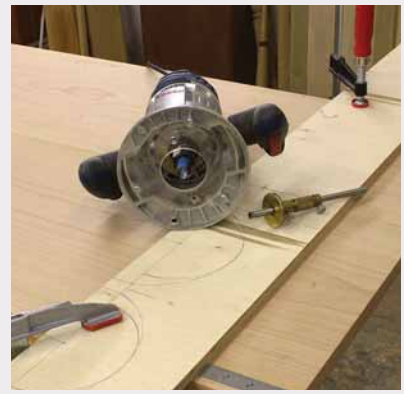

It's all in the setup. *A plywood straightedge guides my router in the first step to forming a tenon for the breadboard ends on the countertop. A 1½"-long tenon is the result.*

Small & mighty. *The long tenons of your breadboard end hold pieces to the top, but it's the ¼" tenon that runs the width of the top that keeps things flat and level.*

Mark for movement. *As you transfer tenon locations to the ends, add a little wiggle room (⅛" or less on either side). There is no need for tenons to fit tight side to side.*

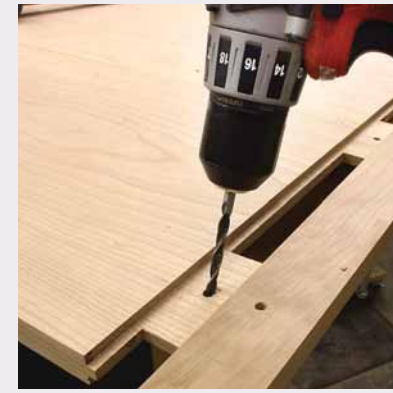

Plan to expand. *Holes in the outer tenons are elongated to keep pegs from splitting the top during seasonal movement.*

Between your layout lines, remove the waste to form each mortise. Make sure your mortises are deep enough to allow the breadboard to fit tight to the tabletop. Slip the pieces together, mark the center of each mortise-and-tenon joint, then drill a ¼" hole completely through the assembly at each mark.

Place a couple lines across the tabletop-to-breadboard joint to later help align your parts, then remove the breadboard from the tabletop – extra length on your breadboard makes this job easy. Because the tabletop experiences seasonal movement, the two outside holes need to be elongated before final assembly. With your drill bit in the hole, rock it from side to side to easily ream the hole.

Add glue to the center 8" or so on both the tabletop and breadboard, then slip the two together making sure to match your lines so the holes align. Put a drop of glue into the center hole then drive a ¼"-square wooden peg through the assembly. In the other holes, drive in a square peg and stop before setting the peg flush with your top. Add glue to the peg then drive the peg flush. The idea is to put glue only on the top ¼" of the peg. This allows the top to move freely.

After the glue sets, trim the breadboards flush with the top, round over the top and bottom edges with a 3/16" roundover bit, then sand the top to #180-grit.

After I've completed the finish on the counter and top, I attach the top using wooden clips (also known as buttons). Slots are cut into the case, then clips are fit to the slots. Screws through the clips make the final connection.

How About Those Drawers?

Some authors of Shaker furniture books think these drawers are tapered because there was leftover clapboard siding from one of the buildings. However, because there are other furniture makers both inside and outside Shaker communities who did the same, I'm more inclined to believe that this was a technique chosen for its aesthetic effect. Of course you can make your drawers without all the tapering – but why not give it a shot?

Drawer fronts for the counter are sized to your openings plus 5/8" in length and 1/4" in height. All edges are moulded with a 3/16" thumbnail, then the top edge and both ends are rabbeted (3/8")to form lips. The bottom edge has no lip.

> "If it is useful and necessary, free yourself from imagining that you need to enhance it by adding what is not an integral part of its usefulness or necessity."
>
> — *Shaker maxim*

Other drawer parts, including the sides and backs, are milled to 1/2" in thickness, then cut to length and width based off your drawer fronts, drawer openings and counter depth.

After the parts are sized, it's time to make the tapered cut. Leave the parts square 7/8" from the bottom of the sides, then taper the balance leaving a 1/4"-thick top edge. Set your band saw to cut between the marks, as shown in the photo below at left. Drawer backs have 1/8" of flat surface, then are tapered to 1/4" at the top. Smooth your band-sawn surface before beginning to cut dovetails.

Begin with the back-to-side dovetails. Transfer the side's profile onto your drawer back, orienting the parts correctly. Work off the squared face of the back to lay out and cut your dovetail pins. Chop away the waste.

Next, position the back to your drawer sides and transfer the pin layout – I marked all sides of each pin without bothering with a scribeline. Remove the waste to form your tails, then slip the joint together. As you complete the partial drawer box, slip the assembly into your case to check the fit.

Repeat the same steps to cut the pins and tails for the front-to-side joinery. (I found it best to elevate the drawer sides as I transferred my pin layouts to the drawer sides. The drawer lip held the pins from contacting the sides when they were flat on my bench.)

To cut the groove for the bottom panel, set up a router table with a three-wing cutter as shown at the bottom of page 47. (Even with the flat surface on each drawer side, it's not easy to cut grooves at your table saw.) A well-placed featherboard keeps the sides tight and square to the cutter.

Glue and assemble your drawer boxes, then sand the units smooth on all faces. Bottoms are fit to the openings with beveled cuts that slide into the grooves. Nails driven through slots attach the bottoms to the drawer backs.

Locks were cut and fit into the top drawers as were small diamond-shaped holly escutcheons.

MAKE DRAWERS WITH TAPERED SIDES

Theories vary as to why some Shaker drawers were built using sides that taper from top to bottom. Whether they were made from leftover clapboards or purposely tapered stock, they offer refinement and enough of a challenge to make building them enjoyable. — GH

Band saw justified. *Tapered drawer sides and backs are quick work at a properly set up and tuned band saw. Tilt the table and use a fence for accurate cuts.*

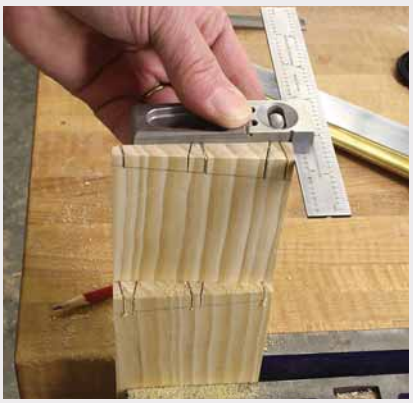

Find your square face. *All the dovetail layout is based off the outside face of the drawer pieces. Here you see a back cut to create pins. Notice how each cut reaches layout lines transferred from the joining piece.*

Up to the challenge? *A through-dovetail – generally the easiest dovetail joint – becomes a bit more of a challenge when both parts are tapered.*

It all comes together. *With dovetailed drawers, an ebonized top with breadboard ends, and a tiger maple case dyed and stained to a deep amber, this Shaker design mixes easily with various styles.*

Finish Up

Of the two extant period Shaker counters, one is made from cherry and one from tiger maple. The cherry counter clearly has a cherry top. The maple counter's top appears to be well-aged pine, or it is much darker maple than that of the case. I wanted to make my top darker as well, so I decided to ebonize my cherry top.

I began with a mixture of ebony aniline dye. Not wanting to suffer the blu-ish cast found when using ebony dye, I remembered a product that Christopher Schwarz used to turn epoxy black: India ink. I mixed one part ink with 10 parts dye and the difference was noticeable. That's the solution I used to dye the top.

For the case, I sprayed a 50/50 mixture of Moser's golden amber maple and brown walnut aniline dye, applied boiled linseed oil to highlight the curl, then finished with several layers of shellac topped with a layer of pre-catalyzed lacquer for extra protection.

To keep from coloring the inlay, I taped around the escutcheons and sprayed a layer of lacquer from an aerosol can. When that was dry I taped off the inlay before starting the dye process. Knobs are installed after finishing is complete. Each is attached 4½" in from the drawer edge of the wider drawers, and centered in the smaller drawers. Drop a small amount of glue into the ½" holes, then drive the knob home.

One aspect of Shaker design that grabs me is the idea that you can easily mix and match pieces with other furniture in your home. Brother Wright's design and craftsmanship of this counter is classic Shaker. In fact, finished with an ebonized top, this counter, at least to my eye, takes on a contemporary look. Whether you ebonize the top or match hardwoods to your case, I'm sure it's the "Wright" counter to build. **PWM**

Glen is a contributing editor to Popular Woodworking Magazine; *he has been building furniture and teaching woodworking for two decades. Visit his blog at woodworkersedge.com.*

Rise to the task. *Half-blind dovetail pins on the drawer fronts need to be transferred to the drawer sides, but the drawer lip prevents the two from lining up. A scrap piece under the drawer side lifts it up to solve the problem.*

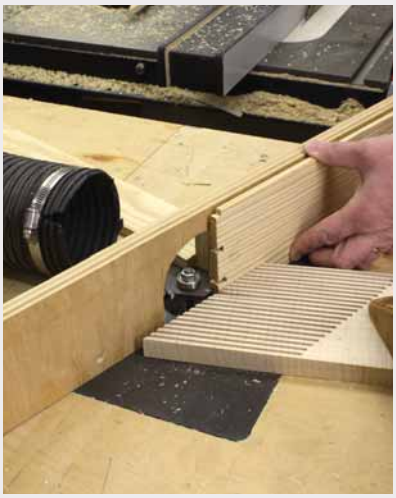

Work smart. *Because drawer-bottom grooves are cut on the tapered face, it's important to use a featherboard at the base of the drawer parts to hold them tight, flat and secure as you cut.*

ONLINE EXTRAS

For links to all these online extras, go to:
■ **popularwoodworking.com/jun12**

VIDEO: *See Glen D. Huey cut the tenons for the breadboard ends on this countertop.*

WEB SITE: *Visit the author's web site.*

ARTICLE: *Learn four good ways to build drawers.*

Our products are available online at:
■ **ShopWoodworking.com**

Perfection *by Hand*

BY JEFF MILLER

Mortise-and-tenon joints tend to frustrate woodworkers far more than dovetails do. That's no mystery; they are genuinely harder to cut than dovetails. The large flat tenon cheeks and mortise walls need to be flat, smooth and parallel, the shoulders have to line up perfectly all the way around the tenon, and to get a fit that works, the tolerances are within a couple of thousandths of an inch.

About a year ago, I started fooling around with an idea to make hand-cut mortise-and-tenon joints a little easier. I came up with a pair of simple jigs that make it possible to cut – in conjunction with a good tenon saw and some mortise and paring chisels – accurate, repeatable joints by hand that rival those cut by machine. The jigs cut down on layout as well. And they make it easy to cut angled tenons. The final bonus is that the tenoning jig can actually help improve your saw technique.

That all may sound a bit like I'm peddling snake oil, but the jigs are very simple in concept. There's a jig for paring mortise walls, and for paring tenons, a sort of an upright miter box combined with a system of spacers. There's no magic involved. There is, however, a fair bit of tweaking the jigs to tight tolerances.

QUICK JIG FOR PARING MORTISES

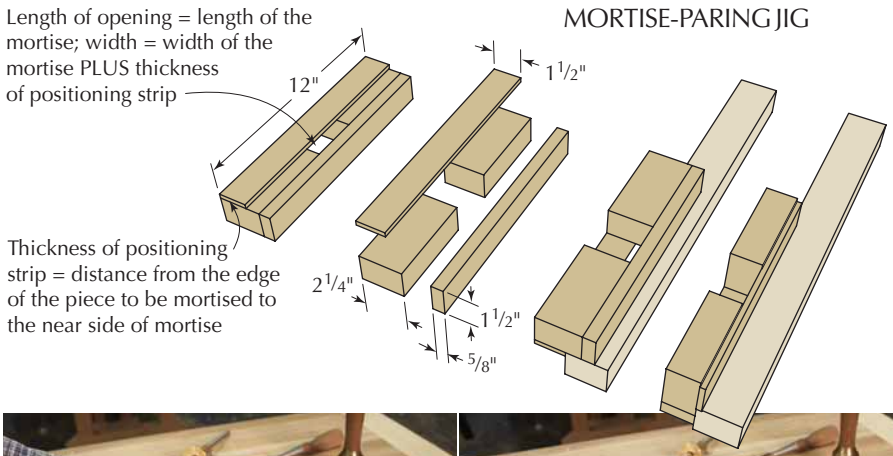

These jigs help you hand cut flawless mortise-and-tenon joints.

Is it cheating? Maybe. But cheating in the same way that a shooting board is cheating: easy, accurate results on something you could conceivably do strictly by hand. And you still need good saw and good chisel technique to get the best results.

Also, the jigs can certainly be used independently. But they work better as a complete system.

Mortise layout. *Hold the positioning strip against your reference edge and scribe the far side and two ends of your mortise. Then flip the jig around and scribe the near side.*

The Mortise-paring Jig

Chopping mortises with a mortise chisel is surprisingly fast and reasonably accurate, but for the best results, it helps to pare the side walls to clean them up. One of the easiest ways to do that and get straight, square results is to clamp a guide block to your workpiece to act as a reference for your chisel. This jig is actually a combination of chisel guides. With it, you can pare both sides of a specific-size mortise located a pre-determined distance from the edge of the workpiece. The jig references off only one edge of the workpiece for greater accuracy. And you don't need to chop by hand for the jig to work; it will clean up the sides of a mortise no matter how you cut it.

This might seem like a lot of work for a specific size joint, but the jig is very quick to make, and most of the time, you need to cut multiples of the same joint for your projects. Make up one for a table or chair, and it might well do for most other tables or chairs you build.

Hand-cut perfection*. Along with a good tenon saw and some mortise and paring chisels, these jigs will help you cut accurate, repeatable joints to rival those cut by machine.*

Once you've decided on the mortise location and size, you're ready to make the jig. The blank should be 1½" thick and 12" long, although it's helpful to have some extra length. Start by adding the distance from the mortise to the edge of the workpiece to 3⅛" (this assumes an ⅛" table saw blade; or you can calculate 2⅞" plus the width of two kerfs) to come up with the width of the jig blank.

Rip the blank into three strips: one equal in width to the distance from the mortise to the edge, one ⅝" wide and the other 2¼" wide. The 2¼" block should then be crosscut to two equal lengths. The pieces will be spaced equal to the length of the mortise (or longer, if you want to use the jig for various lengths of mortises). The simplest way to do this is to cut the block in half, then separate the two halves the desired amount. (You can trim off the ends later, and maybe even use the trimmed parts for another jig.) Clamp and screw the ⅝" strip to the separated 2¼" blocks. Plane flush if necessary.

The placement of the remaining positioning strip will determine the exact size of the mortise. This strip lays flat on the 2¼"-wide block faces, and the opening between the edge of this and the ⅝" strip should equal the width of the mortise plus the distance from the mortise to the edge of the workpiece. An easy way to come up with this dimension without measuring or fussing around is to take an offcut of the positioning strip and a similarly sized piece of scrap that is the same thickness as the tenon you want. Use the two pieces as spacers to align and space the positioning strip. Clamp everything carefully in place, then screw the strip to the 2¼" blocks.

Using the Jig

You can easily use this jig for the initial layout of the mortise. Hold the jig in place against your workpiece with the positioning strip against the reference edge, and scribe the far side and the two ends of the mortise. Then flip the jig around so the positioning strip

PHOTOS BY THE AUTHOR; ILLUSTRATION BY ROBERT W. LANG FROM THE AUTHOR'S DRAWINGS

Crisp mortises. *With this jig, you can pare all your mortise walls clean – hand cut or not.*

is oriented vertically, and use the rest of the jig as a fence against the workpiece. Scribe the near side of the mortise along the positioning strip.

I usually chop a slightly narrower mortise inside these scribed lines, although you can also excavate it using other methods. Once the mortise has been roughed out, clamp the jig back into position with the positioning strip against the reference edge and hold a 1/2"- or 5/8"-wide paring chisel with its back against the inside face of the jig. Pare down while still holding the back of the chisel tight to the jig face. Then move the chisel along just a bit and make overlapping paring cuts until you've cleaned up the whole side of the mortise. Don't try to take off too much wood as you pare; the more you take off, the harder you'll work, and the less likely you are to be accurate. Instead, you may want to take a preliminary pass or two to get closer to the final line (and the jig).

I keep a dedicated chisel for this type of paring, which I ground to a 20° bevel and a 23° micro-bevel. It makes the paring easier, and seems to leave a cleaner side wall to the mortise. But the edge is fragile, and I never use this chisel for anything other than this work.

The Tenoning Jig

The core of the tenoning jig is the saw guide – a slot for the spine of the tenon saw constructed out of two saw guide blocks separated by a spacer (all made of wood), and a pair of ultra-high molecular weight (UHMW) plastic guides for the sawplate. The combination creates a guide that makes it hard to cut other than dead straight and square. The rest of the jig provides support for the workpiece and a way to clamp the jig firmly to a workbench.

The critical dimensions of the saw guide are based specifically on your tenoning saw. Measure carefully the thickness of the saw's back and also the saw's overall height (the back plus the blade). The back measurement, with a little added clearance, provides the thickness for the jig's spacer. The overall height of the saw plus 2 1/8" will be the overall length of the inner and outer saw guide blocks.

Although the spacer is small, the overall accuracy of the jig depends on its precision. Because it is both difficult and dangerous to try to work such a small piece, mill up a larger strip that's at least 12" long and then cut it down to size. The two sides of the spacer should be carefully milled so that they are perfectly parallel and roughly the thickness of the saw back (but no thicker).

Eventually, you want to wind up with a spacer that is two to three thousandths of an inch thicker than the saw's back. This will provide just the right amount of clearance. But don't bother measuring this. You're better off just testing the spacer and adding shims to adjust to a sliding fit that's free of slop.

> "An artist's only concern is to shoot for some kind of perfection, and on his own terms, not anyone else's."
>
> *— J.D. Salinger (1919-2010)*
> *American author*

Getting to the point where you can accurately check the fit requires a bit more work, however. Clamping the parts together is certainly a possibility, but often, the results are not the same once you bolt together the parts. Drilling and bolting together is more reliable.

You can either stick the spacer, the guide blocks and the upright together with double-sided tape between then drill, or make a simple alignment jig for the drill press to hold the parts in position (using tape here isn't a bad idea, either). Either way, it helps to have another section of spacer positioned at the bottom of the guide blocks to help stabilize everything. Drill the three 1/4" holes for the bolts through the stacked-up parts. Wide-flange connector bolts

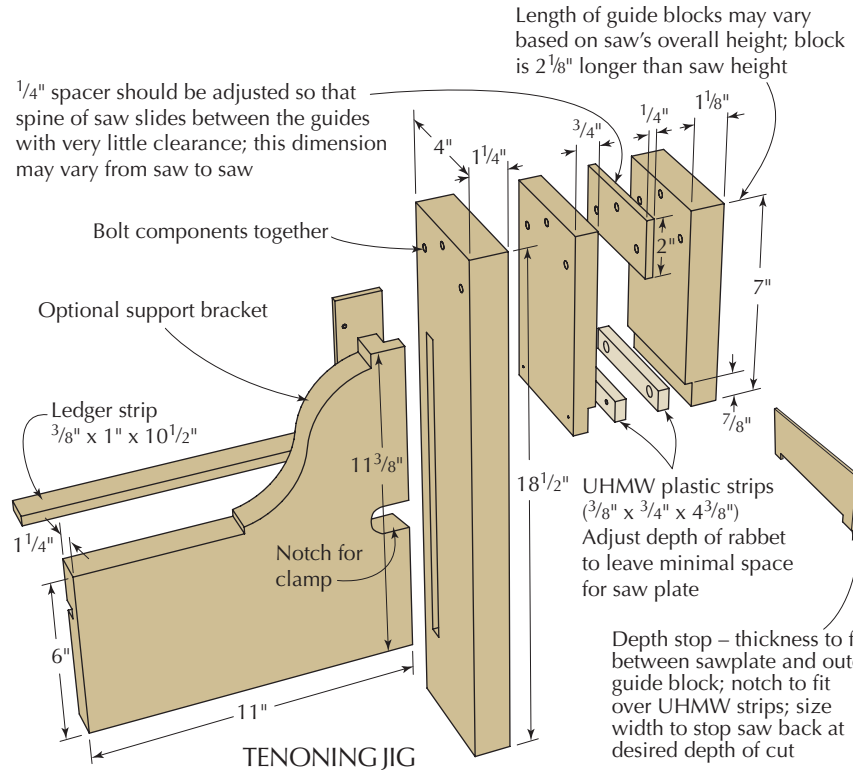

and nuts work well for this jig; these will require counterboring the holes for the nuts to 9 mm (or 3/8") in the outer guide block. Bolt everything together, then check the fit of the saw back between the guide blocks. Adjust the fit with paper (a typical sheet of 20 lb. ink-jet paper is just under .004" thick), masking tape (generally about .005" thick, but somewhat compressible), or clear plastic packing tape (about .001" thick) until the saw can slide between the guides with a little bit of friction. A bit of wax on the guide blocks will make the saw slide better.

The UHMW strips are not always sized accurately or evenly. You can correct that by handplaning them to an exact thickness with the simple jig shown on the next page (variations in the width won't matter). You'll experience less flex in the plastic if you cut the strips to length before planing in the jig. The shavings are unusual, but the material planes well. Once the strips are the same thickness, it's time to work on the rabbets for the plastic strips. This is a somewhat tedious process of bolting things together, testing the fit, taking them apart and making adjustments; often many times over.

Measure the distance between your guide blocks. Subtract that amount from the thickness of two of your UHMW strips measured together (somewhere around 3/4") and divide the result in two. That should be the starting point for the depth of the rabbets.

Disassemble the guide blocks and spacer assembly, and cut the rabbets across the bottoms of the blocks to the depth you just determined by 7/8" wide. Now put everything back together. There shouldn't be any space between the UHMW strips when you slide them into place. Sneak up on exactly the right amount of space for the saw-plate by deepening the rabbets a little at a time. A router plane is perfect for this task, but you can choose whatever method allows you to take off small amounts while keeping the rabbets flat and parallel.

Once fit, the strips should ride against the saw plate without clearance. If you happen to make the rabbet too deep, you can always place shims behind the UHMW strips to bring them closer together. When you think you're close, drill and countersink the UHMW strips for the screws that attach the strips to the guide blocks. The screws securing the UHMW plastic to the inner guide block go through the block into the upright. Be sure all of the countersunk holes are deep enough to keep the screw heads well below the surface of the plastic. Put the jig together one more time to verify the fit and make any additional adjustments as needed.

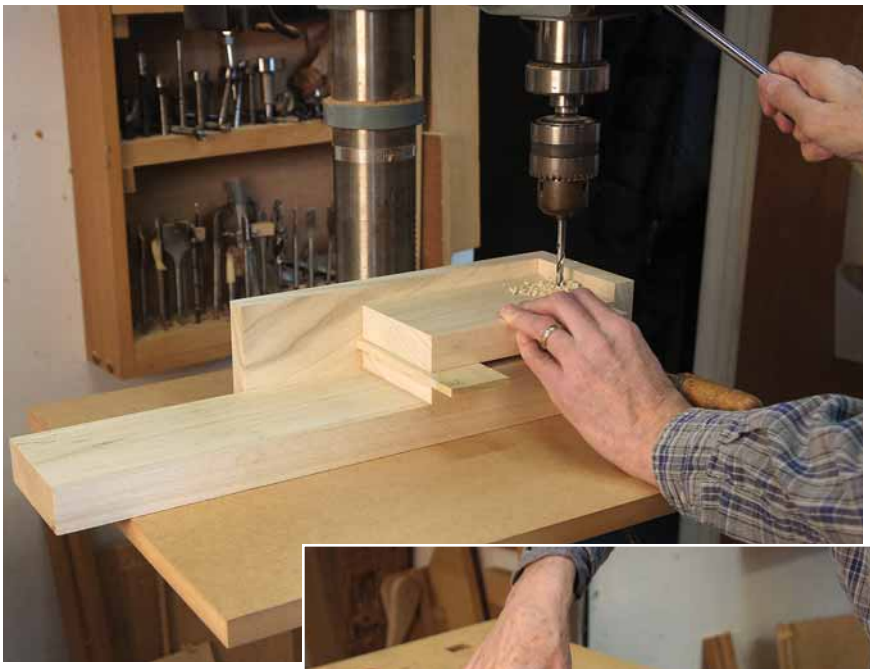

Drill with care. *Position the parts to align the holes in all pieces. A leftover piece of spacer holds the work level.*

Tape as shim. *Masking tape can be used to make minor adjustments to thickness.*

The other important part to the core of the jig is the vertical fence at the back of the upright. The 1/4"-thick by 1 1/2"- to 1 3/4"-wide strip should be screwed into a 1/4"-deep by 1/2"- or 5/8-wide rabbet. At this point, the jig is functional, and you could call it quits. But adding the support bracket makes it much easier to clamp to your workbench.

The Support Bracket

I designed the support bracket to work with most shoulder vises. A ledger strip let into the back of the bracket rests on the benchtop, and the width of the bracket makes it easy to clamp in most vises without racking. But this approach does not work with every workbench and vise setup. You may need to modify the support bracket to set up the jig at a comfortable sawing height and the most secure hold in your vise.

Cut a 1/2"-wide x 1/2"-deep dado in the upright, set 9/16" from the back edge, and a rabbet to leave a matching tongue on the edge of the support bracket. Cut a 3/8"-wide x 3/8"-deep dado for the ledger strip across the back of the support bracket, 4" up from the bottom (to allow for clearance for your vise screw). A cut-out just above this dado along the rabbeted edge will create better access for a clamp. Shape the bracket as desired, then glue and screw it into place. You should only glue about 1" of the end of the ledger strip closest to the upright to allow for cross-grain movement.

The tenoning jig is basically finished now, and you can take it out for

Planing jig. *Make a simple jig to plane the UHMW strips to the same thickness. The plane rides on ledges, which stop the cut at the desired thickness.*

Fit to perfection. *A router plane makes quick and precise work of the rabbets for the UHMW guide strips.*

a test-drive if you haven't already. But there are a few more components you should make to significantly enhance its capabilities.

Most important is a set of spacers for cutting various sizes of tenons automatically. Each spacer controls the workpiece location so that both cheeks of the tenon will be cut exactly the right distance apart. This approach allows you to reference off of one face of the workpiece – much more accurate. Make one cut with the spacer in place, then remove it and re-clamp the workpiece to make the second cut.

Each of the spacers needs to be the thickness of the desired tenon plus the width of your saw's kerf. Sizing the spacers accurately is key. Get as close as you can with careful milling. Then use packing tape, masking tape or paper in conjunction with tape to adjust for an exact fit to a mortise made with a paring jig. Once your spacer is adjusted to perfection, be sure to mark it.

One refinement that can improve the usability of the jig is a small rare earth magnet (in a magnet cup) recessed flush into the surface of the upright of the jig, and a magnet washer likewise recessed into the tenon spacers. While not necessary, it makes it easier to juggle things as you clamp the workpiece to the jig.

You'll also need to make spacers to adjust for the tenon location on the workpiece. These can be made as necessary for various thicknesses of work and tenon locations.

The last accessory you may find useful is a set of depth stops. These are simply strips of wood thin enough to fit freely between the sawplate and one of the guide blocks. Tabs at either end help keep the stop in place. A depth stop cut to a specific width will stop the saw from cutting any deeper once the saw's back reaches the top of the strip.

Using the Jig

Hold the workpiece (and any spacers) in place against the rear fence and up against the bottom of the guide blocks. Clamp them securely to the upright. Slip your saw between the guides and begin sawing. Keep a light grip on the saw's handle and extend your forefinger. Align your forearm with the saw back, and cut smoothly and rhythmically until you reach the desired depth (or the depth stop). An even and steady touch will yield the best results.

Set up for the other tenon cheek by removing the tenon spacer (if you're using a second spacer to control location, leave that one in place) and re-clamp the workpiece. Saw to the shoulder line and unclamp. Cut the tenon shoulders using whatever method you prefer. Clamping a simple guide block with a 90° fence right over the scribed shoulder line can help you pare the shoulders or act as a saw guide. Saw the narrow shoulders close to the line, then pare with a chisel that is wider than the tenon but not as wide as the workpiece.

Angled tenons? Simply make a wedge with the angle you want. Clamp the angled wedge in place in conjunction with the tenon spacer for one cheek, then remove the spacer just as you would for a straight tenon. A guide block with angled sides will help get the shoulder angles just right.

The tenon cheeks should be flat, straight and smooth. There are a number of things to check if you're having problems. Be sure the saw slides smoothly in the jig without any slop. Fine adjustments can be made by changing the bolt tension. Next, consider your saw. Better saws usually yield better results. Regardless, you might want to check the evenness of the set. Lightly and carefully stoning the sides of the teeth can take down slight variations in set that cause a rougher surface. Finally, look at your technique. The more relaxed and steady the cut, the better the results. **PWM**

Jeff is a Chicago-based furniture maker and woodworking teacher.

ONLINE EXTRAS

For links to all these online extras, go to:
- **popularwoodworking.com/jun12**

VIDEO: *Watch the author demonstrate his tenon jig.*

IN OUR STORE: *"Sawing Fundamentals," by Christopher Schwarz.*

WEB SITE: *Visit Jeff Miller's web site for a list of the classes he teaches.*

ARTICLE: *Read our story on how best to apply glue to a mortise-and-tenon joint.*

Our products are available online at:
- **ShopWoodworking.com**

Drawboring Demystified

BY JENNIE ALEXANDER & PETER FOLLANSBEE

This ancient mortise-and-tenon joinery technique needs no glue, no clamps.

The excerpt that follows is adapted from "Make a Joint Stool from a Tree," a new book by Jennie Alexander and Peter Follansbee (Lost Art Press). While the book teaches you start to finish how to make a joint stool, many of the techniques you'll learn therein are applicable in the modern shop – perhaps none so much as drawboring.

Drawboring is a method used in 17th-century joinery that is still valid today. That a mortise-and-tenon joint can be permanently secured with no glue and no clamps is hard for some modern woodworkers to swallow. But all it takes is some careful planning, a brace and bit, and a tapered wooden pin. Jennie Alexander and I have been very fortunate to closely study many examples of surviving woodwork from the 17th century, and have worked repeatedly to try to mimic the tool marks and techniques we saw there.

There's no need for glue in this scenario; that means you can take your time to get the framing just right. There's no need for haste, nor for clamps to pull things together. That's what the pins do.

— Peter Follansbee

Joint stool. *The joint stool above, made by Peter Follansbee, is built in the 17th-century tradition, employing drawbored mortise-and-tenon joints for centuries of durability.*

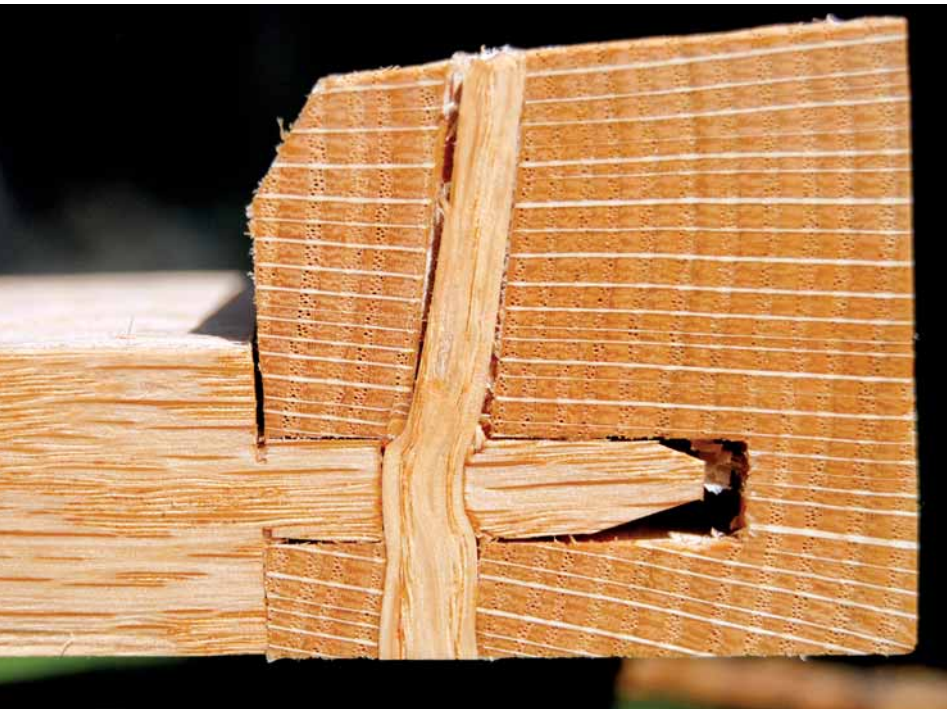

Solid for centuries. *This cutaway shows a drawbore pin snaking its way through the offset holes; the kink in the pin is clearly evident. This joint is a testament to the great strength of oak and the use of drawboring – a thin piece of hardwood like this can hold a mortise-and-tenon joint together for centuries. It pulls the tenon into the mortise and never lets it go.*

Simply put, drawboring is an intentional misalignment of the holes bored in the mortises and tenons.

These holes are bored through each component separately, and they are offset so that a tapered pin driven into them will pull the tenoned rail up tight against the mortised stile.

We know this is a period practice because we have seen it in surviving works, sometimes in disassembled pieces, or in those worn down by misuse. The photo at left shows clearly the kink in the pin resulting from snaking its way through the offset holes. In addition to this sort of evidence, we have a documentary record for drawboring as well. Joseph Moxon describes it in his section on joinery in "Mechanick Exercises:"

Then with the Piercer pierce two holes through the Sides, or Cheeks of the Mortess, about half an Inch off either end one.

PHOTOS BY JENNIE ALEXANDER & PETER FOLLANSBEE

***Follansbee's marking technique**. The thinnest awl in the shop is best for marking your drawbore location. It can get right in against the circumference and transfer it accurately to the tenon's face.*

***Alexander's marking technique.** The centerpunch needs to fill the hole completely, so make one with material chosen to fit your boring tool. It makes a very clear depression on the tenon face.*

Then knock the Tennant stiff into the Mortess, and set it upright, by applying the Angle of the outer Square, to the Angle the two Quarters make, and with your Pricker, prick round about the insides of the Pierced holes upon the Tennant. Then take the Tennant out again, and Pierce two holes with the same Bit, about the thickness of a shilling above the pricked holes on the Tennant, that is, nearer the shoulder of the Tennant, that the Pins you are to drive in, may draw the Shoulder of the Tennant the closer to the flat side of the Quarter the Mortess is made in. Then with the Paring-chissel make two Pins somewhat Tapering, full big enough, and setting the two Quarters again square, as before, drive the Pins stiff into the Pierced holes.

We're using the joint stool shown in the book from which this is excerpted as the example – but the following applies to any drawbored mortise-and-tenon joint. At this point, the holes through the mortises have already been bored, two per mortise, approximately a mortise chisel's width back from the edge of the workpiece.

With the test-fitted frames on the bench, mark the tenons for the pins that will secure these joints for the next few centuries. The faces of rails and stiles must be in the same plane. The rails' outer shoulders should be a tight fit against the stiles' arrises. The inside corners should not touch the stiles. Check that the apron's upper edge lines up properly with the marks on the stiles that define the top of the stool. At the stretcher level, be sure there's no gap in the mortise above the stretcher, where it will be visible in the finished stool. If there is a gap, bump the stretcher upward, shifting the space beneath the stretcher. You might need to check that the ends of the mortise are cut square to the edge, so they don't interfere with the tenon's fit.

When all that is checked, scribe inside the hole onto the tenon face with a thin, sharp awl. Alexander prefers lightly tapping a centerpunch into the pin hole. Make a punch by pointing the shank of an old drill bit or steel rod that fits snugly into the pin hole.

Disassemble the frame and bore the holes in the tenons. It is critical to remember to move in the proper direction: toward the tenon shoulder. You can eyeball this placement, or you might find it helpful to mark the center of the tenon's pin hole. With the awl, prick the new centerpoint about $^{1}/_{16}$" closer to the tenon shoulder.

Reassemble the joint and sight through the offset holes. The picture at near right shows the general idea of what we're after; the offset should take up about one-quarter to one-third of the hole. When you have bored all four tenons for one frame, you can test-assemble this frame yet again, and

FIX A MIS-BORED HOLE

So you mis-bored a hole in a tenon. Usually this means you moved away from the shoulder instead of toward it. It's not the end of the world; you can fix it. The simplest way is to make a pin to fill the hole. Use bone-dry oak and shave it to fit the hole completely. Then glue it in, and trim it off. Once the glue dries, you can re-mark the hole and bore again.

***Second chance.** This is how you get a second chance on the mis-bored tenon. One pin has been trimmed with a saw; the other is as it was driven. Once they are both trimmed, use a chisel to pare them flush. Then test-fit the joint, mark it and re-bore it.*

***Fixed.** In the end, all that will remain of these pins is a crescent-shaped fragment filling the errant hole.*

Slowly now. *Toward the shoulder – that's the thing to keep in mind. Bore the hole slowly. The tenon is thin, and you don't want to blow out the back of it. The piercer bit excels at this; it pokes through the stock very cleanly.*

lightly pull the joints tight by driving in tapered metal "drawbore pins." These pins can be easily made by adapting a machinist's alignment pin. Any rod or awl that tapers from 5/32" to 5/16" along 4" can be used. Installed in octagonal cross-sectioned wooden handles, they can be tapped in with a hammer and easily removed by hand.

If there is a question about a particular joint, remove the pin and sight through the hole against the light. If the interference is too great, use a hand-held square-tapered reamer to enlarge the tenon hole. This tool is nothing but a drawbore pin that has been filed to a sharp-edged square cross-section.

You are approaching final assembly of the joint stool. Don't hurry. Drawboring is the heart of the matter. (Again, our example applies to the build in "Make a Joint Stool from a Tree," but the technique can be applied to any drawbored mortise-and-tenon project.)

After the two straight frames are fitted it's time to take up the angled side frames, test-fit the aprons and determine the length apart, and set the straight rails aside. Take two mating stiles that define one side of the stool and ensure you have the correct stiles.

Now pare and fit the tenons from one apron to these stiles. Take this apron all the way to the drawboring stage, then test-fit the two stiles and the apron. The stretcher's shoulder-to-shoulder length is found by scribing, not measuring. Place a side stretcher on its stiles with the stretcher's upper edge lying across the stile's faces. Line the stretcher up so its front shoulder meets the stile's arris right at the point that marks the top of the mortise.

Now prick a mark on the stretcher where it hits the other stile. That's the point from which you should lay out the other tenon shoulder with the adjustable bevel. Then complete the tenon as before. Some of this seems a little upside down, but it gets you a closer fit than working from measurements.

There's no need to hurry here. Check the layout before cutting the second tenon.

Mark the inside of the side rails with this joint I.D. system: One end of the side rails is marked with the chisel, the other end with a gouge. Repeat the whole process for the other side stretcher. They should be the same length or very close. If they are too far off, the stool will be out of square.

Now you can test-fit the entire joint stool frame. Then knock it apart again. It's time to make the pins and assemble the stool frame.

Make the Pins

For the pins to pull the joints together, they must be incredibly strong. Make them from the straightest-grained offcuts you can find. Alexander and Follansbee have different approaches to pins; we will show you both methods.

> "Shall the ax boast itself against him that heweth therewith? or shall the saw magnify itself against him that shaketh it?"
>
> — *Isaiah 10:15 (King James Bible)*

Alexander uses a shaving horse and drawknife to make very carefully tapered long pins from riven straight stock. Select the best straight-grained 15"-long rail stock. Rive this into 1/2"-square sticks. Hold the stick in a shaving horse and drawknife a 5"-long square on the butt so that the shaving horse can secure the stick and register it when it is rotated 90° at a time. Support the thin stock with a narrow board held under the workpiece. Place the square butt under the shaving horse jaw and make a 10"-long taper. Bore a test hole in a thin board with your piercer bit and taper the pin until it goes halfway through. Try your drawknife with the bevel down and up to see what works best for you. After the tapered square stick is finished, slightly relieve the corners.

Follansbee shaves pins at the bench from short (5"- to 8"-long) stuff using a large, broad chisel. These blanks are riven into sections about 1/2" square using a stout knife or small cleaver as a sort of mini-froe. Hold the blank from

Offset. *This offset looks like it will work fine. Experimentation will help you get the hang of it. There's leeway involved; it's not an exact science. Too much offset can be fixed more easily than not enough.*

Scribe. *Find your shoulder-to-shoulder length by scribing. This conept works without fail if you follow the steps; no ruler, no numbers. It's accurate and quick.*

MAKE THE PINS

Alexander shaves the pins. *Working long stock like this goes hand in hand with using the drawknife and shaving horse. The extra length also lends itself to getting a long and gradual taper, the best form for these pins.*

Follansbee rives. *Riving principles apply here, just as on larger-scale stuff. Split in halves. Straight-grained stock is key. Never throw out any perfectly straight off-cuts, and keep a large supply on hand. The pins are the driest stock in the whole stool.*

Posture counts. *It's easy to think you just trim the pins, but there's more to it than that. Body posture makes a difference. The left hand is braced against the torso, helping to hold the stock steady. The right hand has the chisel tucked against the body as well. Very smooth and powerful movements guide the chisel.*

Facets. *The pins we've found protruding inside stools and other joined works are usually faceted like the ones shown here. There's no need to make them perfectly round; driving them through the joint will burnish them to a degree.*

its top end and shave downward with the broad chisel. Position the tip of the pin on a piece of scrap wood so you don't mark up your bench. Working each face in turn, shave them into even squares.

Then taper them by paring down with the chisel, taking shavings from each face for an even taper. Sometimes you need to flip the pin end-for-end to get the right amount of taper. Once it's tapered, shave off the corners so the resulting piece is generally octagonal. Then point the thin tip with your chisel or a knife.

People are leery of shaving small stuff like these pins with a large chisel, but like many of these procedures, body position and movement make this task simple and efficient. For a right-handed joiner, hold the chisel in your right hand with the forefinger extended along the back of the chisel. The chisel is braced in your grip, and your arm is tucked against your torso.

The movement comes from your legs. Rise up on your right foot and come down with the chisel in place. With your arm braced against your torso, you limit the travel of the chisel. It is quite a short stroke. This posture provides considerable power and accuracy. With some practice you will become quite accurate and able to shape pins quickly and easily.

Assemble the Stool

At assembly, it's a good idea to take a moment to clear the bench of extra stuff that will be in the way. Start with the straight front and rear frames of the stool. Check the marking system, and gather two stiles, and an apron and stretcher that fit them.

Put the apron and stretcher into one stile then lay the stile on the bench with the rails pointing upward, and drop the other stile onto the tenons. Knock things about to fit the pieces together, and drive the apron upward until its top edge aligns with the scribed lines on the stiles that mark the top of the stool. When you are satisfied that things are as they should be, tap a metal drawbore pin into each joint.

Assemble. *The extra length at the top of the stile is helpful for knocking things this way and that. A wooden mallet shouldn't mar the stock, but it's best to strike it where it doesn't matter.*

Steady on. *Steady, even blows from the hammer are what you are after here. An errant hammer blow can shatter the pin, and then it's difficult to remove. No need to hurry; take your time and drive them home. It will be helpful if you make a test joint or two.*

Now remove the pin(s) from one joint and hammer in your oak pins. It helps if the pin is pointed when starting it in the drawbored holes. Hold the oak pin steady and hammer it down into the joint. Listen as you drive it; the sound will change pitch as the pin reaches the point at which it will go no more.

Make sure as you are driving these pins that there is clearance below the stool's frame for the pin to exit. You can try to align things on the bench so you are working over one of your holdfast holes. Stop just before the stile splits. Now drive the next pin. Do one stile's apron and stretcher, then pin the next stile to that assembly.

If the pin threatens to break, trim it off so it protrudes just an inch or two above the face of the stock, then drive it some more. This often steadies the pin so it can withstand further blows.

Trim the Pins

Trim the pins on the inside of the assembly any number of ways. You can saw them off or trim them with a chisel or gouge. Use the chisel bevel down and pare from both sides. Cutting straight across will blow out the edge of the pin. Trim the outside just above the surface with your tenon saw, then pare it down to the surface with a broad chisel, again held bevel down.

Once the front and rear frames are assembled, trim the pins. Then set the frames face-down on the bench, with the feet pointing at each other.

If you marked your joints clearly, this step is a snap. If you didn't, then it can be pretty confounding. Many of these pieces look alike, and sometimes they will almost fit together the wrong way. That's enough to really cause confusion. We've built stools with parts upside down before. It's not hard to do. But it is hard to un-do.

Next, drop the end rails into the mortises in one frame. It doesn't matter which, but check all joint I.D. marks so you have the proper rails in place. Also make sure all the joints are bored for pins. Then fit the other frame down onto these rails. Just as before, knock things about until the frame is all test-fitted again.

Lay the stool on one side frame and insert the drawbore pins in the opposite frame. Repeat the procedure with your oak pins just as you did for the straight frames. Trim the pins on the face so you can then flip the stool over onto this face to drive the last pins in the final frame. Now the stool is all pinned, and you're ready to trim its feet and top. PWM

Jennie Alexander (formerly known as John Alexander) is the author of "Make a Chair from a Tree" (Taunton). Peter Follansbee is the joiner at Plimoth Plantation, the host of two DVDs on 17th-century style carving (both from Lie-Nielsen Toolworks). Both authors have written numerous magazine and journal articles.

Flush the pins. *There is a tendency to try to pare straight across the pin's head. You might get away with it sometimes, but it often causes tear-out. Get in the habit of working from both sides of the pin. It takes only a minute to do it right.*

ONLINE EXTRAS

For links to all these online extras, go to:
- **popularwoodworking.com/jun12**

IN OUR STORE: *"Make a Joint Stool from a Tree," by Jennie Alexander and Peter Follansbee.*

ARTICLE: *"A 1600s Joiner's Tool Kit," by Peter Follansbee.*

ARTICLE: *"The Best Oak Money Can't Buy," by Peter Follansbee.*

BLOG: *Read "Joiner's Notes," Peter Follansbee's blog.*

Our products are available online at:
- **ShopWoodworking.com**

Woodworker's Marketplace

Classified

Books

WE HAVE A WIDE VARIETY of woodworking books - from small projects, to home improvement, to enhancing your woodworking skills, and more! To see our full line of books, please visit our web site at ShopWoodworking.com!

Finishing Supplies & Equipment

BLOXYGEN SAVES LEFTOVER FINISHES - Just Spray, Seal and Store. www.bloxygen.com or (888) 810-8311.

Hand Tools

DI LEGNO WOODSHOP SUPPLY Quality woodworking hand tools at an affordable price. www.dlws.com or 1-412-331-1236.

WWW.JIMBODETOOLS.COM The Largest Antique Tool Website on Earth! Fine Antique Woodworking Tools of every kind.

Kits & Plans

FULL SIZE FURNITURE LAYOUTS Drawn by Philip C. Lowe. 978-922-0615. 116 Water St, Beverly, MA 01915. www.furnituremakingclasses.com

Schools/Instruction

JOHN C. CAMPBELL FOLK SCHOOL, Brasstown, NC. Courses for all skill levels. Weeklong and weekend classes year-round, taught by nationally known instructors. Friendly, supportive environment. Comfortable, on-campus housing. Delicious meals served three times a day. www.folkschool.org. 800/365-5724.

PRIVATE CLASSES with woodworking author in the Great Smoky Mountains- All skill levels- www.GregoryPaolini.com (828) 627- 3948

THE ACANTHUS WORKSHOP, LLC Traditional woodworking education with lead instructor, Charles Bender, using conventional hand tools and modern machinery. Call 610-970-5862 or visit www.acanthus.com.

THE SCHOOL AT ANNAPOLIS WOODWORKS, Davidsonville, MD.Turning, Carving, Furniture Making, etc. Weeklong and Weekend classes for all skill levels.www.annapoliswoodworks.com 301-922-0649

Seat Weaving Supplies

CHAIR CANE & SPLINT, Shaker tape, fiber & natural rush. Complete line of basketweaving supplies. Royalwood Ltd., 517-WW Woodville Rd, Mansfield, OH 44907. 800-526-1630. www.royalwoodltd.com.

Classified rate is $6.00 per word, 15-word minimum. Order must be accompanied by payment; ads are non-commissionable. Send to: ***Popular Woodworking Magazine****, 10151 Carver Road, Suite 200, Blue Ash, OH 45242 or Don Schroder, d.schroder@verizon.net. Phone: 610-821-4425, Fax: 610-821-7884.*

Advertiser's Index

Design by Proportion

Simple adjustments in ratios can produce pleasing and functional results.

My wife, Barb, set a bag of groceries on the kitchen counter and said, "I saw a great work table – will you build me one?"

On the surface it sounded like a simple request, but I've been down this road before. She spied a trestle table in a furniture store that sparked her interest and got her thinking about what she really wanted. This was confirmed when we visited the store showroom.

After a few moments of looking it over she said, "This is exactly what you can make for me, except the top is too wide, I don't like this breadboard end on the top, the feet need a little spice (maybe a flowing curve?) and the cross-brace thingy – can you move that down a bit so I can rest my foot on it while I'm sketching? But other than that it's perfect!"

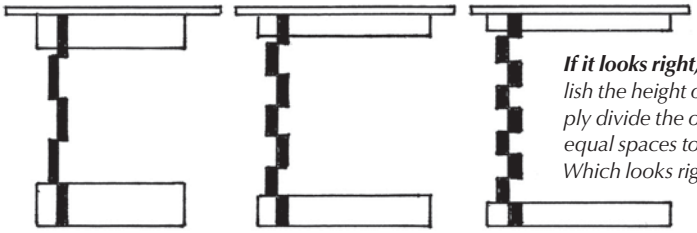

If it looks right, it is. *To establish the height of the base, simply divide the overall height in equal spaces to find a sweet spot. Which looks right to your eye?*

What I took away from that conversation was a sense for the scale and proportions she wanted. Smaller details, such as the profile on the trestle foot, would be easy if I could nail the overall feel she was after.

Simple request. *My wife asked for a work table on which to set up an easel and spread out her paints.*

Deceptively Simple

It's hard to imagine a furniture design that's simpler than a trestle table. Yet that simplicity comes with a challenge. With everything in plain sight, a single miscue can throw the design off. Trestle tables span a wide range of tastes from robust, sort of timber-frame like, to light and delicate. Because this form is so basic it's a good example to use while sharing some practical insights on proportioning. I actually built this without using a tape measure and opted to rely on simple proportions to guide the design.

We started by establishing the overall width and length of the top. I asked Barb to spread her hands apart and show me how deep she'd like the tabletop and then I mocked up few configurations in cardboard for her to look at. All were rectangles defined by simple whole-number ratios stepped off with dividers. I made up several different samples, all the same width but with different lengths, 3:5, 4:7 and 1:2 (see "Visual Notes" on page 62 for more information). She quickly chose the 4:7 as the footprint for her tabletop.

Proportioning the Trestle

I've included here a few trestle table drawings to work out the proportions of the feet and the brace at the top of the upright that supports the top.

Barb wanted a narrow tabletop and it worked out to be the same width as the overall height of the table. That meant the end view of the table is essentially a square.

The top of our square is defined by the width of the tabletop and the side of the square by the overall height. First I established the height of the bottom foot. It's important to note that proportionally it relates to the space above it that it anchors. To do this, I want the foot to punctuate the height above it.

CONTINUED ON PAGE 62

PHOTOS & ILLUSTRATIONS BY THE AUTHOR

CONTINUED FROM PAGE 60

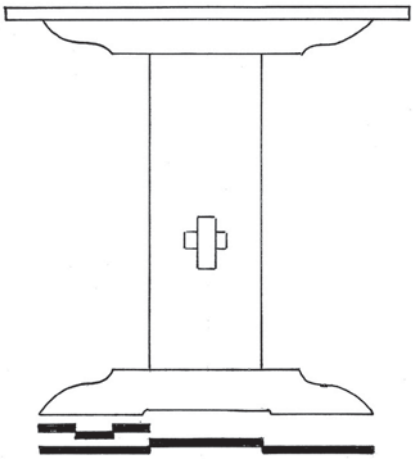

Adjust by ratios. *These proportions are arbitrary but they provide a structure to make judgment calls. If you feel the upright is too wide it's a simple matter of making it a fourth instead of a third.*

VISUAL NOTES

Pre-industrial artisans relied on a small series of simple rectangles to establish a form. They were based on simple ratios between height and width starting with a square, which is a ratio of 1:1, moving through a sequence of rectangles up to two squares, which is a ratio of 1:2. In between are rectangles using the simple ratios of 2:3, 3:4, 3:5, 4:5 and 4:7.

I call these rectangles "visual notes" because these ratios also correspond to harmonic tones in music, for example 2:1 being an octave.

Historic design books often listed these rectangles as ideal proportions for room layouts or window openings and they often show up just beneath the surface on furniture designs. In period design literature they were sometimes described in terms of squares. A rectangle with a ratio of 1:2 is two squares; a rectangle with a ratio of 2:3 is a square and a half square.

The 4:7 rectangle Barb liked for the tabletop is a square and 3/4 square. Thinking of these rectangles as combinations of squares makes them easier for us to visualize. Can you close your eyes and visualize two squares side by side? — GW

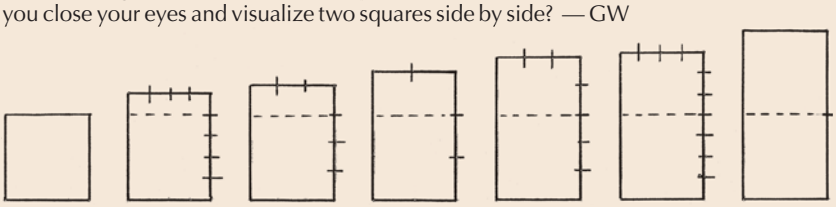

Composition. *This handful of rectangles based on simple ratios can be used to compose a design much like a musician uses notes to write a song.*

From a proportional standpoint this means dividing the overall height into five or more equal parts and using the bottom part to define the height of the foot. Dividing up the height like this helps to focus your eye on the relationship between the foot and the space above it.

I began with a division of five equal spaces but found it looked heavy to my eye; dividing by six moved it in the right direction but still not there. Several tries later, dividing the height by nine parts, I hit the sweet spot I was looking for. Turning my attention then to the top brace, I chose to lighten its proportions by making it 3/4 of the height of the bottom foot. Then I used the height of the top brace to define how far it's set back from the bottom edge of the tabletop. This also established the overall length of both the top brace and bottom foot. From there I divided up the bottom foot with simple proportions to establish the width of the upright and the decorative curve at the ends, as shown above at left.

Space the Trestles

Spacing the trestles apart defines another rectangle when viewed from the front. I again used whole number proportions and found that a rectangle three parts high by four parts wide (3:4) provided plenty of legroom while still pleasing the eye. The top of the horizontal cross brace aligns with the midway point between the floor and the top, as shown below.

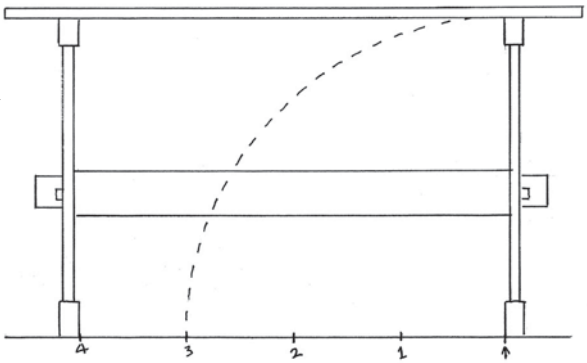

Form & function. *The trestles form a simple 3:4 rectangle that provides ample leg room and a pleasing overhang for the top.*

All these judgments were entirely subjective. There may be millions of perfect tables out there just waiting for you to design and build. Gaining a working knowledge of proportions and how they interrelate will increase your design skill and confidence tenfold.

When I completed her table, Barb beamed happily, "You nailed it" she said. "Just like I imagined it!" **PWM**

George is the author of two design DVDs from Lie-Nielsen Toolworks (lie-nielsen.com).

ONLINE EXTRAS

For links to all these online extras, go to:
- **popularwoodworking.com/jun12**

BLOG: *Read more from George R. Walker about design on his Design Matters blog.*

IN OUR STORE: *George R. Walker's DVDs.*

Our products are available online at:
- **ShopWoodworking.com**

About This Column

Design Matters dives into the basics of proportions, forms, contrast and composition to give you the skill to tackle furniture design challenges with confidence.

HARBOR FREIGHT TOOLS

Quality Tools at Ridiculously Low Prices

LIFETIME WARRANTY ON ALL HAND TOOLS!

FACTORY DIRECT TO YOU!

How does Harbor Freight Tools sell high quality tools at such ridiculously low prices? We buy direct from the factories who also supply the major brands and sell direct to you. It's just that simple! See for yourself at one of our 380 Stores Nationwide and use this 20% Off Coupon on one of our 7,000 products*, plus pick up a Free 6 Piece Screwdriver Set, a $4.99 value. We stock Shop Equipment, Hand Tools, Tarps, Compressors, Air & Power Tools, Woodworking Tools, Welders, Tool Boxes, Generators, and much more.

- Over 20 Million Satisfied Customers!
- 1 Year Competitor's Low Price Guarantee
- No Hassle Return Policy!
- 100% Satisfaction Guaranteed!

Nobody Beats Our Quality, Service and Price!

SUPER COUPON!

FREE! WITH ANY PURCHASE

PITTSBURGH

6 PIECE SCREWDRIVER SET

ITEM 47770

REG. PRICE $4.99

HARBOR FREIGHT TOOLS - LIMIT 1 Free item only available with any purchase. Cannot be used with any other discount or coupon. Coupon not valid on prior purchases. Offer good while supplies last. Shipping & Handling charges may apply if free item not picked up in-store. Coupon cannot be bought, sold or transferred. Original coupon must be presented in-store, or with your order form, or entered online in order to receive the offer. Valid through 9/1/12. Limit one coupon per customer and one coupon per day.

87501586

SUPER COUPON!

20% OFF ANY SINGLE ITEM!

HARBOR FREIGHT TOOLS - LIMIT 1 Use this coupon to save 20% on any **one** single item purchased when you shop at a Harbor Freight Tools store. *Cannot be used with any other discount or coupon. Coupon not valid on any of the following: gift cards, Inside Track Club membership, extended service plans, Compressors, Generators, Tool Cabinets, Tool Carts, Welders, Floor Jacks, Campbell Hausfeld products, open box items, Parking Lot Sale items, Blowout Sale items, Day After Thanksgiving Sale items, Tent Sale items, 800 number orders or online orders. Coupon not valid on prior purchases after 30 days from original purchase date with original receipt. Coupon cannot be bought, sold, or transferred. Original coupon must be presented in-store in order to receive the offer. Valid through 9/1/12. Limit one coupon per customer and one coupon per day.

11371555

SUPER COUPON!

LOT NO. 42429/69471

4 PIECE WOOD CHISEL SET 1/4" 1/2" 3/4" 1"

SAVE 43% **$4.49** REG. PRICE $7.99 Item 42429 shown

HARBOR FREIGHT TOOLS - LIMIT 9 This valuable coupon is good anywhere you shop Harbor Freight Tools (retail stores, online, or 800 number). Cannot be used with any other discount or coupon. Coupon not valid on prior purchases after 30 days from original purchase date with receipt. Offer good while supplies last. Coupon cannot be bought, sold, or transferred. Original coupon must be presented in-store, or with your order form, or entered online in order to receive the coupon discount. Valid through 9/1/12. Limit one coupon per customer and one coupon per day.

98413646

SUPER COUPON!

PITTSBURGH

12" RATCHET BAR CLAMP/SPREADER

LOT NO. 46807/ 68975/69221

Item 46807 shown

SAVE 63% **$1.99** REG. PRICE $5.49

HARBOR FREIGHT TOOLS - LIMIT 8 This valuable coupon is good anywhere you shop Harbor Freight Tools (retail stores, online, or 800 number). Cannot be used with any other discount or coupon. Coupon not valid on prior purchases after 30 days from original purchase date with receipt. Offer good while supplies last. Coupon cannot be bought, sold, or transferred. Original coupon must be presented in-store, or with your order form, or entered online in order to receive the coupon discount. Valid through 9/1/12. Limit one coupon per customer and one coupon per day.

31197024

SUPER COUPON!

MECHANIC'S GLOVES

WESTERN SAFETY

LARGE LOT NO. 93640

X-LARGE LOT NO. 93641

SAVE 50% YOUR CHOICE! **$3.99** REG. PRICE $7.99

HARBOR FREIGHT TOOLS - LIMIT 7 This valuable coupon is good anywhere you shop Harbor Freight Tools (retail stores, online, or 800 number). Cannot be used with any other discount or coupon. Coupon not valid on prior purchases after 30 days from original purchase date with receipt. Offer good while supplies last. Coupon cannot be bought, sold, or transferred. Original coupon must be presented in-store, or with your order form, or entered online in order to receive the coupon discount. Valid through 9/1/12. Limit one coupon per customer and one coupon per day.

64050374

SUPER COUPON!

CEN-TECH

12" COMBINATION SQUARE SET

LOT NO. 92471

SAVE 60%

$3.99 REG. PRICE $9.99

HARBOR FREIGHT TOOLS - LIMIT 6 This valuable coupon is good anywhere you shop Harbor Freight Tools (retail stores, online, or 800 number). Cannot be used with any other discount or coupon. Coupon not valid on prior purchases after 30 days from original purchase date with receipt. Offer good while supplies last. Coupon cannot be bought, sold, or transferred. Original coupon must be presented in-store, or with your order form, or entered online in order to receive the coupon discount. Valid through 9/1/12. Limit one coupon per customer and one coupon per day.

69665254

SUPER COUPON!

6" DIGITAL CALIPER

PITTSBURGH

LOT NO. 47257

SAVE 66% **$9.99** REG. PRICE $29.99 Includes two 1.5V button cell batteries.

HARBOR FREIGHT TOOLS - LIMIT 9 This valuable coupon is good anywhere you shop Harbor Freight Tools (retail stores, online, or 800 number). Cannot be used with any other discount or coupon. Coupon not valid on prior purchases after 30 days from original purchase date with receipt. Offer good while supplies last. Coupon cannot be bought, sold, or transferred. Original coupon must be presented in-store, or with your order form, or entered online in order to receive the coupon discount. Valid through 9/1/12. Limit one coupon per customer and one coupon per day.

90872450

SUPER COUPON!

RECIPROCATING SAW WITH ROTATING HANDLE

CHICAGO ELECTRIC POWER TOOLS

SAVE 50% LOT NO. 65570 **$19.99** REG. PRICE $39.99

HARBOR FREIGHT TOOLS - LIMIT 5 This valuable coupon is good anywhere you shop Harbor Freight Tools (retail stores, online, or 800 number). Cannot be used with any other discount or coupon. Coupon not valid on prior purchases after 30 days from original purchase date with receipt. Offer good while supplies last. Coupon cannot be bought, sold, or transferred. Original coupon must be presented in-store, or with your order form, or entered online in order to receive the coupon discount. Valid through 9/1/12. Limit one coupon per customer and one coupon per day.

89925196

SUPER COUPON!

CENTRALPNEUMATIC

28° ANGLE FRAMING NAILER

LOT NO. 68068

SAVE $30 WE CARRY A FULL LINE OF FASTENERS **$69.99** REG. PRICE $99.99

HARBOR FREIGHT TOOLS - LIMIT 4 This valuable coupon is good anywhere you shop Harbor Freight Tools (retail stores, online, or 800 number). Cannot be used with any other discount or coupon. Coupon not valid on prior purchases after 30 days from original purchase date with receipt. Offer good while supplies last. Coupon cannot be bought, sold, or transferred. Original coupon must be presented in-store, or with your order form, or entered online in order to receive the coupon discount. Valid through 9/1/12. Limit one coupon per customer and one coupon per day.

40078638

SUPER COUPON!

CENTRALPNEUMATIC

3 GALLON, 100 PSI OILLESS PANCAKE AIR COMPRESSOR

LOT NO. 95275

SAVE 50% **$39.99** REG. PRICE $79.99

HARBOR FREIGHT TOOLS - LIMIT 3 This valuable coupon is good anywhere you shop Harbor Freight Tools (retail stores, online, or 800 number). Cannot be used with any other discount or coupon. Coupon not valid on prior purchases after 30 days from original purchase date with receipt. Offer good while supplies last. Coupon cannot be bought, sold, or transferred. Original coupon must be presented in-store, or with your order form, or entered online in order to receive the coupon discount. Valid through 9/1/12. Limit one coupon per customer and one coupon per day.

70090667

SUPER COUPON!

CENTRAL MACHINERY

2 HP INDUSTRIAL, 5 MICRON DUST COLLECTOR

LOT NO. 97869

$149.99 REG. PRICE $249.99 SAVE $100

HARBOR FREIGHT TOOLS - LIMIT 3 This valuable coupon is good anywhere you shop Harbor Freight Tools (retail stores, online, or 800 number). Cannot be used with any other discount or coupon. Coupon not valid on prior purchases after 30 days from original purchase date with receipt. Offer good while supplies last. Coupon cannot be bought, sold, or transferred. Original coupon must be presented in-store, or with your order form, or entered online in order to receive the coupon discount. Valid through 9/1/12. Limit one coupon per customer and one coupon per day.

22908391

SUPER COUPON!

CENTRAL MACHINERY

OSCILLATING SPINDLE SANDER

LOT NO. 95088

SAVE $60 **$89.99** REG. PRICE $149.99

HARBOR FREIGHT TOOLS - LIMIT 5 This valuable coupon is good anywhere you shop Harbor Freight Tools (retail stores, online, or 800 number). Cannot be used with any other discount or coupon. Coupon not valid on prior purchases after 30 days from original purchase date with receipt. Offer good while supplies last. Coupon cannot be bought, sold, or transferred. Original coupon must be presented in-store, or with your order form, or entered online in order to receive the coupon discount. Valid through 9/1/12. Limit one coupon per customer and one coupon per day.

35956683

SUPER COUPON!

WINDSOR DESIGN

60" HARDWOOD WORKBENCH

LOT NO. 93454/69054

Tools sold separately.

Item 93454 shown

SAVE $85 **$144.99** REG. PRICE $229.99

HARBOR FREIGHT TOOLS - LIMIT 4 This valuable coupon is good anywhere you shop Harbor Freight Tools (retail stores, online, or 800 number). Cannot be used with any other discount or coupon. Coupon not valid on prior purchases after 30 days from original purchase date with receipt. Offer good while supplies last. Coupon cannot be bought, sold, or transferred. Original coupon must be presented in-store, or with your order form, or entered online in order to receive the coupon discount. Valid through 9/1/12. Limit one coupon per customer and one coupon per day.

87826918

380 Stores Nationwide

Order Online at HarborFreight.com and We'll Ship Your Order FedEx®
or 1-800-423-2567

CARD #76 OR GO TO PWFREEINFO.COM

Finishing in One Day (Or Less)

The key to a quick finish is the finish you choose.

Stains & finishes. *When your goal is to complete your finishing in a day or less, the critical feature you're looking for is speed of drying. Common types of finish you might use are arranged on the left and common types of stain on the right.*

Finishing is seldom the most enjoyable part of woodworking, so many woodworkers want to get it over with in a day – or even an afternoon. Many manufacturers encourage this with their directions, which often produce less than optimal results because they push the process too fast.

Nevertheless, there are ways to accomplish the entire finishing process (after the sanding) within a day or less. Here's how.

The Need for Two Coats

To begin with, it's important to emphasize that you can't get good results with just one coat of finish. A minimum of two are necessary, including sanding the first coat after it has dried, to develop the full sheen (degree of shine).

The first coat of finish soaks in, raises the grain of the wood a little (a lot with water-based finishes) and locks the raised grain in place upon drying. The surface not only feels rough, it appears duller than it is supposed to because the finish film is too thin and the raised grain breaks up the light reflection.

You need to sand this first coat smooth and apply a second to achieve the desired sheen. Use a sandpaper grit that achieves smoothness efficiently without cutting deeper than necessary. In most cases, #220, #320 or #400 grit.

So the biggest consideration involved in getting all your finishing done in a day or less is the drying time of the finish you're using. There has to be enough time for the first coat to dry so you can sand and apply the second coat.

Oil & Varnish

With the exception of gel varnish, the slow dry time of oils and varnishes (including polyurethane varnish and wiping varnish) pretty well eliminates them as possibilities. You'd have to apply the first coat very early in the day to allow enough drying time so you could sand and apply the second coat late. And you'd have to be working in a warm location. (That speeds drying.)

Gel varnish dries faster than other varnishes, so there's usually time to apply two coats in a day. But two coats of gel varnish aren't enough to develop the full sheen because what remains after wiping off the excess is too thin.

A problem with all of these finishes is that they continue to put off a fairly strong odor for several days after they are dry to the touch, so even though you may call the project complete after just one day, you'd probably want to wait a few days to put it into use.

Lacquer & Shellac

Both lacquer and shellac dry rapidly because all that needs to happen for these finishes to dry is evaporation of the solvent: lacquer thinner or alcohol. So it would be easy to get two or even three coats applied in a day.

This may not be the case with "brushing" lacquer, however, which

Two coats necessary. *To develop the full sheen of a finish, a minimum of two coats are necessary, with the first sanded after it has dried. The contrast between one coat (left) and two coats (right) shows the difference.*

CONTINUED ON PAGE 66

PHOTOS BY THE AUTHOR.

CONTINUED FROM PAGE 64

dries considerably slower than lacquer meant for spraying. (The act of spraying a finish with a spray gun or aerosol has no impact at all on the speed at which the finish dries.)

The big difference between lacquer and shellac is odor. Lacquer has a very strong odor for as long as it takes for all the solvent to evaporate. The odor of shellac is denatured alcohol, which is quite mild.

You could put a shellac-finished project into use fairly quickly, even the next day – as long as you're not treating the surface roughly. But you may want to wait several days with lacquer.

Water-based Finish

Arguably, the best choice of finish when you're in a hurry is water-based finish (identified by the thinning and clean-up solvent, which is water).

Water-based finish, though relatively difficult to use, dries quickly and has very little odor. You could apply three coats easily in an eight-hour period (except in extremely high humidity) and put the object into service the next day. The finish won't be as hard and scratch resistant as it will become after a week or so, however.

The problem with water-based finish that will slow you down a little is that the first coat raises the grain significantly more than with the other finishes. You'll have to spend more time sanding the first coat smooth before continuing. Once you have done this, additional coats don't have any grain-raising effect.

Staining

There are four common possibilities for stains: oil-based liquid, oil-based gel, water-based liquid and water-soluble dye.

You won't be able to complete your project in a day if you use an oil-based liquid stain. It should be allowed to dry overnight before continuing with the finishing steps.

In contrast, oil-based gel stains and water-based liquid stains dry rapidly, just like other gel and water-based finishes. So you should be able to get a project stained and apply two coats of finish in an eight-hour period.

There are two problems you should be aware of if you use a water-based stain. First, it dries very fast. If your project is large or complex, you may have trouble getting the excess stain wiped off before it begins to dry. This will leave a blotchy coloring. Applying the stain with a soaked cloth or sponge (or a spray gun) is more efficient than brushing. Having a second person wipe dry after you apply will also help produce good results.

Spraying. *Spray guns and aerosols have their advantages over brushing, but drying speed isn't one of them. Each type of stain or finish has its own drying rate, no matter how it is applied.*

Second, water-based stain raises the grain a lot. To avoid sanding off some of the color, especially on edges, wait until after you have applied the first coat of finish to sand. "Bury" the raised grain, then sand smooth.

Water-soluble dye stain, which contains no binder (finish), dries slower than water-based stain, which does contain binder. So you have more time to get the stain applied.

If you have wiped off the excess and the air is fairly dry, the stain should dry within three or four hours. This leaves enough time to apply two coats of fast-drying shellac, lacquer or water-based finish the same day.

But be aware that brushing water-based finish over water-soluble dye can lift some of the color and move it around the surface. It's best to spray the finish, or seal the wood first with another finish – for example, shellac. PWM

Bob Flexner is author of "Flexner on Finishing" and "Wood Finishing 101."

Rescue fast-drying stain. *Water-based stains dry rapidly. On large and complex surfaces, you may have trouble getting the excess stain wiped off before it hardens (as shown in this picture). If this happens to you, quickly apply a wet coat of stain to smaller sections to reliquify the hardened stain and wipe off faster, or get a second person to wipe while you apply.*

Water-soluble dye stain. *A brushed water-based finish may redissolve a water-soluble dye stain and move the color around the surface, making some areas lighter and some darker. You need to "seal in" the dye with a sprayed first coat (for example, with an aerosol water-based finish) or with another finish (for example, a first coat of shellac).*

ONLINE EXTRAS

For links to all these online extras, go to:
- **popularwoodworking.com/jun12**

ARTICLES: *You'll find many free finishing articles on our web site.*

IN OUR STORE: *"Flexner on Finishing" and "Wood Finishing 101."*

Our products are available online at:
- **ShopWoodworking.com**

POPULAR Woodworking MAGAZINE

WORKSHOP MAKEOVER GIVEAWAY

This $6,000 Workshop Could Be Yours!

ENTER ONLINE TODAY!

Enter for your chance to WIN A COMPLETE SHOP that features ALL you see here.

ENTRY DEADLINE: Midnight, Eastern Standard Time June 30, 2012

10" PROSHOP TABLE SAW
JET JPS-10

16" PLANER
JET JWP-16OS

6" JOINTER
JET JJ-6CSDX

1-1/2-HP DUST COLLECTOR
JET DC-1100VX-CK

14" BAND SAW
JET JWBS-14DXPRO

BAR CLAMP ASSORTMENT WITH MOBILE RACK
BESSEY BTB30A

4-PC "H" STYLE PIPE CLAMP SET
BESSEY BPC-H34

K-BODY® REVO™ FRAMING KIT
BESSEY KRK2450

K-BODY® REVO™ EXTENDER KIT
BESSEY KRX2450

24 - 4" LIGHT DUTY STEP-OVER CLAMPS
BESSEY LMU2.004

Complete prizes and contest rules are also available at www.popwood.com/winshop

www.popwood.com/winshop

ENTER NOW!

POPULAR WOODWORKING's "WORKSHOP MAKEOVER GIVEAWAY" SWEEPSTAKES These are only abbreviated rules. The "Workshop Makeover Giveaway" Sweepstakes is subject to Official Rules available during promotion period (Dec 1, 2011 - June 30, 2012) at www.popwood.com/winshop. See Official Rules for complete entry details and prize descriptions. NO PURCHASE OR SUBSCRIPTION NECESSARY TO ENTER OR WIN. Must be a legal resident of the U.S. or Canada (excluding Quebec) who has reached the age of majority in the participant's jurisdiction of residence to enter. One Grand Prize–Woodworker's Home Workshop valued at US $6,000. Odds of winning depend on number of entries. Void in Quebec and where prohibited. Sponsor: F+W Media, Inc.,10151 Carver Rd., Suite 200, Blue Ash, OH 45242 USA.

The Workshop Makeover Giveaway is sponsored by:

JET BESSEY POPULAR Woodworking MAGAZINE

Nothing is Absolute

Ease and speed versus the idealization of the past – sometimes.

When Lord Acton wrote that "absolute power corrupts absolutely," he was referring to politics, but he could as easily have been referring to tools. After all, he wrote this now-famous phrase in the spring of 1887, one year after Karl Benz patented his first internal combustion engine, and only six months after the death of that great machine hater, William Morris. The world was accelerating in the late 19th century, propelled forward by coal and the beginnings of the oil age. It hasn't slowed down since.

Having worked as a professional cabinetmaker for 12 years, I'm not someone who idealizes the days when logs were turned into boards by two strong men and a pitsaw. If you were lucky and got the top position, you were merely exhausted at the end of the day. If you drew the short straw, your dinner was seasoned with sawdust. Technology has eased modern lives to the point that people go to the gym in search of physical effort, but it can't be denied that when something is gained, something is lost. One need only compare medieval stonework with any new government building to be convinced of that.

In 2012, many people feel a vague sense of unease at the speed, size and strength of the world we have created. And yet, anything less than an enthusiastic embrace of every new gadget, no matter how intrusive, seems to bring on accusations of Luddism or naivete. Critics of technology are accused of hypocrisy if they are caught using anything more advanced than a sharpened stick. The message that this attitude sends is that technology should be immune to criticism from anyone who uses it in any form. Yet it is not only possible to question technology without rejecting every technical innovation, it is necessary.

Nuance and subtlety need to be introduced into the ongoing debate about technology, whether the issue is the Internet, GPS or a plunge router. William Morris understood this more than a century ago, when he questioned the social impact of technological advances. Despite his personal distaste for machines, he recognized their value in lessening the hardship of working lives, as long as they were used for this purpose rather than the further enrichment of the workers' bosses. Morris's historical voice was dampened by the cacophony of the 20th century, and he is now remembered primarily as a designer of beautiful wallpaper.

Morris's dim view of machines, however, lives on, even amongst many people who have never heard of him. Anyone who has used a freshly sharpened handplane on a piece of clear cherry is aware that neither the finished result nor the experience of the job can be replicated by a machine. The same craftspeople also realize, however, that a well-tuned table saw can save hours of unpleasant drudgery.

We idealize the craftspeople of the pre-Industrial era as masters of their craft. We must remember that this mastery was born of necessity, not because they were inherently more skilled, pure or committed than any of us. When facing down a piece of figured rock maple armed only with a scraper and a plane, you have no choice but to have sharp tools and a thorough understanding of how to cooperate with the wood.

This is what is lost when you have 240 volts to hurl at a recalcitrant slab of oak. When you acquire the means to overpower something, you reach the point where fine craft is in danger.

An experienced craftsperson has the knowledge and wisdom to use power sparingly, reducing drudgery while maintaining a delicate, consensual relationship with materials and design. But a beginner will have difficulty becoming that craftsperson if he or she has never been allowed, or perhaps forced, to deal with the wood on its own terms. **PWM**

Alan is a writer, art historian and environmental activist in Kingston, Ontario. He worked as a professional cabinetmaker for 12 years, and now enjoys woodworking as a hobby.

ONLINE EXTRA

For links to all online extras, go to:
- **popularwoodworking.com/jun12**

ARTICLES: *Visit our web site for more "End Grain" articles.*

PHOTO BY AL PARRISH

Make it a
Lee Valley Father's Day

The Perfect Gift – Just a Call or a Click Away

Lee Valley offers hundreds of clever Father's day gift ideas, in a range to fit any budget. Call or place your order online for convenient home delivery.

1. **Set of 3 Veritas® Miniature Planes** – All three of our miniature planes (shoulder plane, edge plane, and router plane) are fully working models,and each comes in its own French-fitted presentation box. Made in Canada. 05P82.10 $95.00
2. **Laguiole Knife** – Rich in history, this brass, rosewood and stainless-steel folding knife features the traditional bee as a thumb rest. 8" open, 4 3/8" closed. 33K06.05 $74.50
3. **Flexcut™ Whittler's Pocket Knife** – The folding design of this carving knife protects the keenly sharpened high-carbon steel 2" roughing blade and 1 1/2" detail blade. High-carbon steel (Rc55). Made in USA. 06D05.20 $45.00
4. **Batoning Chisel with Scabbard** – The 6 3/4" long chisel has a stainless-steel handle double-scarf welded to a manganese steel blade (Rc58-60) with resin-impregnated pakka wood scales. 09A02.45 RH $16.50 09A02.46 LH $16.50
5. **3D Pewter Plane Key Chain** – This 2 1/8" long miniature is modelled after the Veritas® Bevel-Up Smoother Plane. Hand crafted in Canada. KD334 $9.50
6. **"Little Shaver" Pencil Sharpener** – Based on a model we discovered at an antique tool auction, this pencil sharpener presents a particularly elegant method for bringing a pencil to a point. Made in Canada. 15P16.01 $39.50
7. **Pair of Trick Bolts** – Although these may look like ordinary nuts and bolts, our trick versions are designed to challenge your expectations. About 1 1/2" long. Stainless steel. Made in Canada. 50K26.10 $16.95

For more gift ideas, visit us online. You can browse our catalog online, or request a copy when you place an order.

1-800-683-8170 www.leevalley.com

Shipping and N.Y. sales tax extra.

A gift card from Lee Valley is always welcome.

Lee Valley & Veritas®

CARD #28 OR GO TO PWFREEINFO.COM