Casework Box Joinery

Good

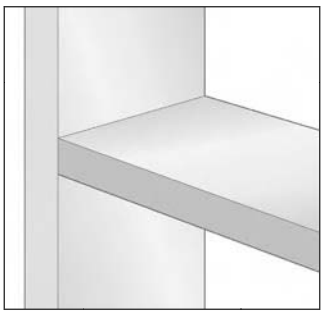

T-Butt

A standard joint for cabinetry, this is a simple but weak joint that requires little investment in terms of time, machinery or tools.

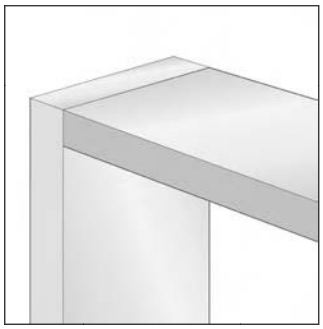

Corner Butt

The same simple joint can be used in the middle of a case piece (top) or to form a corner as shown directly above.

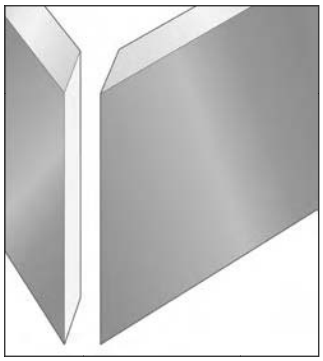

Miter

This traditional box joint hides end grain. With most casework, the joint will be short-grain-to-short-grain, which offers very little strength.

Better

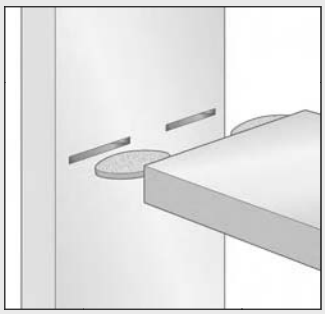

Butt with Biscuit

Adding reinforcement (biscuits as shown, dowels or screws) to a butt joint improves the joint's strength.

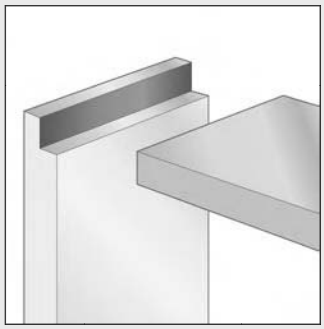

Rabbet

A rabbet joint offers more gluing surface than a butt joint and also adds better support to a corner joint.

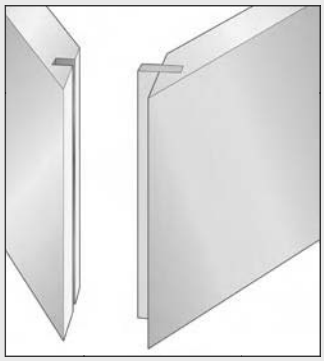

Splined Miter

Adding a spline to a miter joint increases strength and improves alignment. It also provides the opportunity for an artistic element.

Best

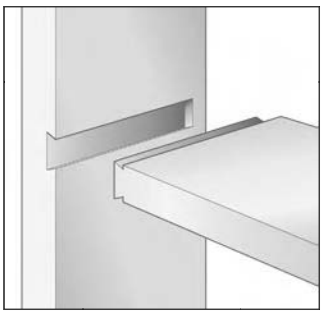

Sliding Dovetail

A sliding-dovetail joint effectively locks the two pieces together for great strength. This joint can be stopped (as shown) or through.

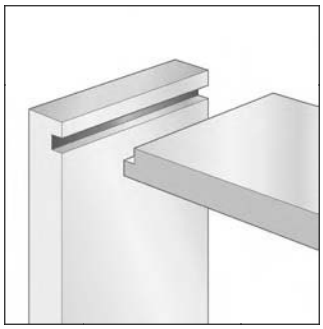

Rabbet and Dado

By locking the rabbet in a dado, the strength and protection against racking on this corner joint are greatly improved.

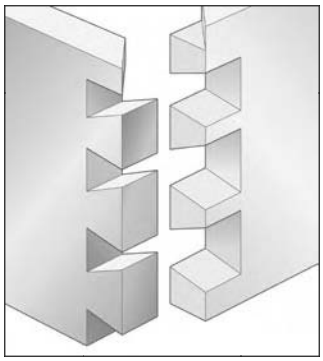

Dovetailed Miter

This joint offers visible joinery, but shows only a miter on the edges of the box, which makes it both attractive and strong.

A Step Further

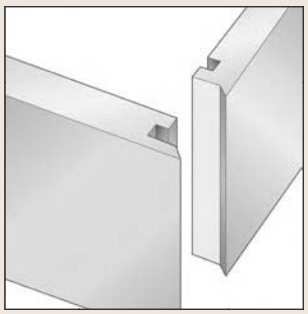

Locking Miter

This joint is an improvement over a miter joint, without adding a biscuit or spline. It offers greater gluing surface and strength.

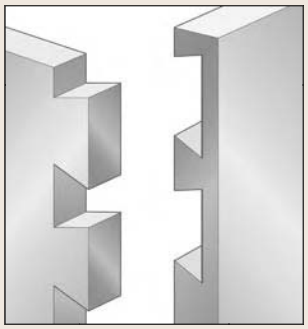

Half-blind Dovetail

No joint provides as much strength as a dovetail. This joint can be partially visible (as above), completely visible or completely hidden.

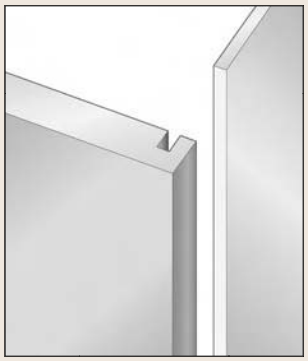

Groove and Panel

When it comes to adding a back to a case piece, this joint offers strength and convenience. For a removable back, a rabbet is preferred.

Illustrations by Len Churchill