Fixed-width Panel Raiser

BY WILLARD ANDERSON

Build a plane that cuts smooth and crisp raised panels with, against or across the grain – the magic is in the spring and skew.

Panel-raising planes are used to shape the raised panels in doors, paneling and lids. The profile has a fillet that defines the field of the panel, a sloped bevel to act as a frame for the field and a flat tongue that fits into the groove of the door or lid frame.

I've studied panel-raising planes made circa the late 18th and early 19th centuries, including one made by Aaron Smith, who was active in Rehoboth, Mass., from 1790 to 1823 (Smith may have apprenticed with Joseph Fuller who was one of the most prolific of the early planemakers), and another similar example that has no maker's mark.

Both are single-iron planes with almost identical dimensions, profiles and handles. They differ only in the spring angles (the tilt of the plane off vertical) and skew of the iron (which creates a slicing cut across the grain to reduce tear-out).

The bed angle of the Smith plane is 46º, and the iron is skewed at 32º. Combined, these improve the quality of cut without changing the tool's cutting angle – which is what happens if you skew

Gauges & guides. *It's best to make each of these gauges before you start your plane build. In the long run, they save you time and keep you on track.*

Shaping tools. *The tools required to build this plane are few, but a couple of them – the firmer chisel and floats – are modified to fit this design. The keyhole saw, or pad saw, is the perfect choice to define and saw the angles of the abutment.*

PHOTOS BY THE AUTHOR;
ILLUSTRATIONS BY ROBERT W. LANG FROM THE AUTHOR'S MODELS

a standard bench plane.

The two planes have a fixed integral fence and no nicker. The right edge of the profile is non-cutting and acts as a depth stop. The left edge (also non-cutting) acts as the fence.

This panel-raising plane is designed to be held at a spring angle of 19° and is well suited to work with material that is 5/8" to 3/4" thick. The heel of the Smith plane is stamped "9/8 * 1/16"," which corresponds to a profile width of 1 3/16".

Specialized Gauges & Tools

In building panel raisers, there are a number of gauges I use to lay out the angles of the skew, bed and abutment, spring and breast (see the drawings on page 26). And there's another gauge that straddles the cheeks of the throat to track the progress of leveling out the bed; it looks like a two-pronged fork.

I also make a set of three testing wedges for the abutment (10°, 11° and 12°), and a pair of mock plane irons from quartersawn beech. These help to gauge the flatness of the bed at various stages.

It's also useful to have a 5/8"-wide firmer chisel and it's a necessity to have a set of floats – push and pull side floats, an edge float and a bed float. All should to be ground so that the edges match the angle of the throat between the bed and the abutment, and the cheeks.

Each abutment requires two saw cuts to define the limits of the angle.

Vintage planes. *My panel-raising plane (below) is based on two vintage examples (right). The plane in front was made by Aaron Smith (circa 1790-1823); the one in back is from Roy Underhill's collection and has no maker's mark.*

Vintage keyhole saws, or pad saws, have blades that are thick enough to make this long, unsupported crosscut (I file the teeth with plenty of fleam, but with no particular set).

Throat Mock-up

The best advice I can give you before you begin work on your plane is to take the time to build a mock-up of the plane's throat. Make your model wider than the actual plane so it's easier to check angles and fit parts.

In this plane, the skew angle of the throat is 32° and the angle to which the sides of the wedge are planed is only 23°. This is because the wedge goes in at 45°, and is cut at a 15° angle across its width.

The mock-up also allows you to gauge the modification of your firmer chisel and floats as you grind and file them to match the corners of the throat.

Wedges

A test wedge is necessary to gauge that the abutment slots are shaped to the correct angle and depth, and that the shapes of the two abutments are exactly the same. The abutment slot has an included angled of 10°. Depending on how carefully it's shaped, the angle may vary. (Note that a tapered iron, such as the one I'm using here, adds approximately 1°, so the wedge will have at least an 11° or 12° taper.)

The test wedges – shown with the other gauges on the opening page – are skewed just like the floats. Again, the throat mock-up is invaluable for testing the fit.

Customized. *Grind and file a set of floats to 23° along the long edges to mate with the corners of the throat. The edge float requires special attention because the teeth need to be recut. Gauge the results against your throat mock-up.*

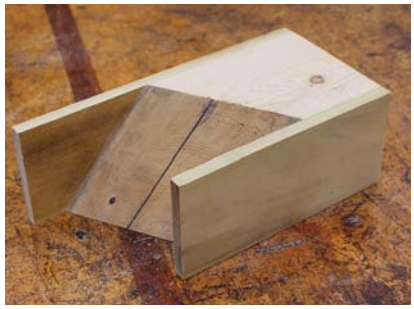

Larger view. *A throat mock-up makes tool modification easier and helps to establish and confirm the angles needed during construction. It also makes it easy to shape your wedge.*

About the Body

The stock is quartersawn beech with the outside of the tree oriented to the sole of the plane. If the grain is not parallel to the sole, orient the blank so the grain rises toward the toe. Mark the toe end with an upward-pointing triangle.

The Smith plane is 2 3/16" wide, 2" thick and 14 1/4" long. On my blank I left an extra 1/2" at each end for waste. In practice, the stock should be at least 1/2" wider than the width of the plane iron to give sufficient material for the cheeks. The iron I used begins at 1 3/4" wide, but after creating the 32° skew on the long edges, it's closer to 1 5/8".

I work off of a midline – a single plane of symmetry for future layout – to reduce measurement errors. To establish the midline, divide the toe and heel of the blank with pencil marks, then connect these two points along the top of the blank. Square these lines

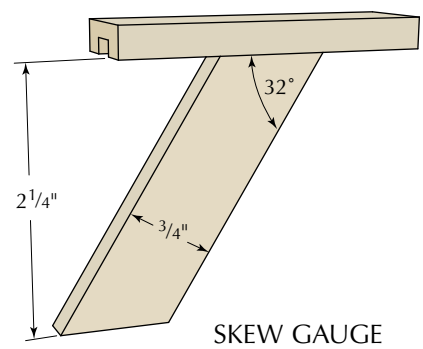

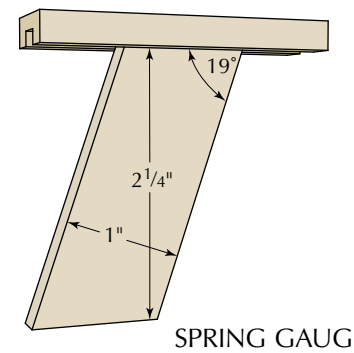

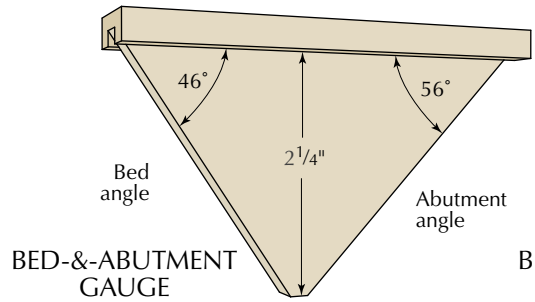

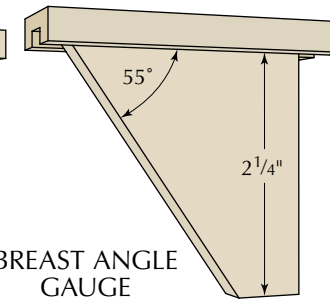

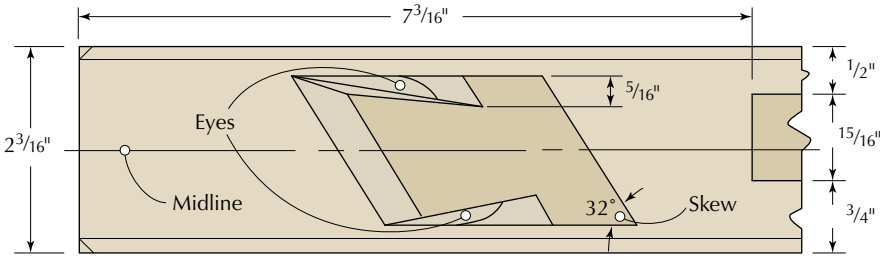

PLANE SCHEMATICS, TOP

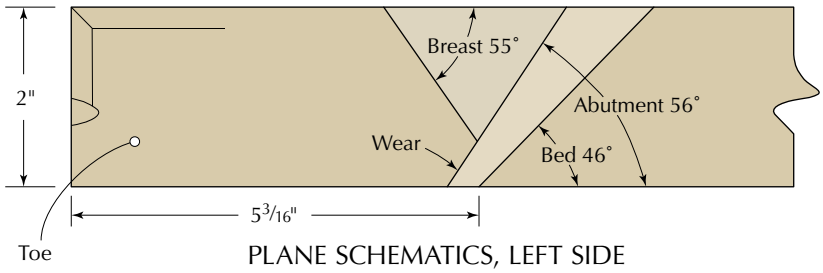

PLANE SCHEMATICS, LEFT SIDE

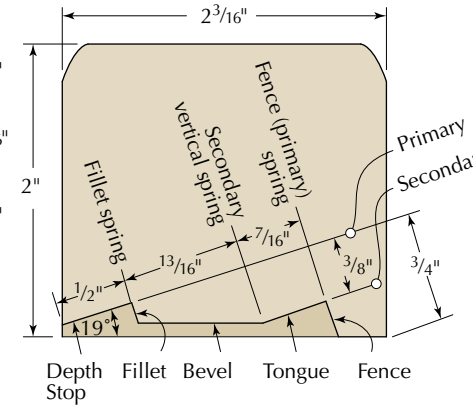

TOE PROFILE

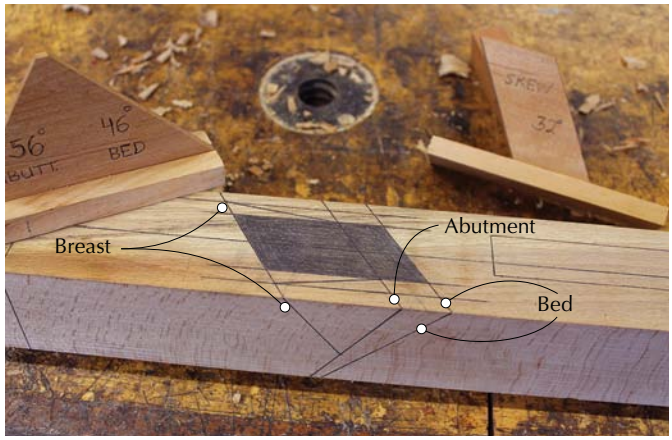

Match this. *Mouth layout and the position of your iron are most critical. Take your time as you establish these lines.*

to the bottom then connect the lines along the sole.

Mark the Throat & Mouth

Layout measurements are taken from the left cheek of the plane (toe pointed forward), as well as from the midline. Critical lines are scribed in with a knife and others are penciled.

To begin, mark the two waste ends of the plane stock, then locate the rear mouth line on the left cheek (5 3/16" from the front edge of the stock). Use the bed-and-abutment gauge to draw in the 46° bed line, then from that line, knife in the 32° skew angle on the top and bottom of the stock.

On the sole, knife in a second skew line 3/16" in front of the mouth line to define the front edge of the mouth. Use the bed-and-abutment gauge to draw in the abutment line on the left cheek, then use the breast angle gauge to lay out the breast line so it intersects the abutment line about 3/4" up from the sole. (This establishes the wear.)

The initial mouth width needs to be as narrow as possible, because the final width is not generated until the profile is cut.

Using the skew gauge, carry the abutment and breast lines across the top of the blank and then use the appropriate gauge to carry the three lines down the right cheek so the marks are on both sides and the top.

Because the throat is skewed, the width of the throat in the plan view is less than the actual width of the iron. To find this measurement, set the iron in your throat mock-up and measure the width of the iron square across the mock-up. (Another option is to lay out a line angled at 32°, position your modified blade on the line then measure the width of the iron square across.)

This measurement is critical. It defines the final width of the mouth and throat, and it locates the fence that's cut into the sole of the plane.

Center this measurement across the midline both on the top and the sole of the stock. Set your marking gauge to this point based off the left cheek, then scribe a line along the entire sole, making sure that you place tick marks at the front and rear of the stock.

Move in 5/16" from those layout lines and mark the top of the plane between the bed and breast lines, then mark the sole of the plane between the two mouth lines. This defines the initial excavation of the mouth and the throat inside the abutments.

Mark the Profile

The profile is defined by two horizontal spring lines that reference off the left cheek, and three vertical spring lines that reference off the sole.

Begin at the left cheek corner of the sole. Use the spring gauge as your guide to knife in two lines: The first is 3/8" up from the corner; the second is at 3/4". These are the secondary and the primary horizontal spring lines, respectively.

To lay out the vertical spring line locations, start with the toe tick mark registered with your marking gauge during the mouth layout. Position the spring gauge on the sole and align the

Laid out. *The five spring lines are what guides the remaining work. You can also see the midline and how the spring lines relate.*

gauge with that tick mark. Knife in that line; it's the fence spring line.

Measure 7/16" along the primary spring line and knife in the secondary vertical spring line, then in another 13/16" to knife in the fillet spring line.

To establish the bevel spring line, make a tick mark 1/8" up the fillet spring line. Referencing a square off the left cheek, strike a square line across the toe to hit this point and the secondary vertical spring line. This defines the bottom corner of the fillet and the angle of the bevel of the profile.

Once the profile is marked on the toe, reproduce a matching set of lines on the heel. I set my marking gauge to each point that a spring line intersects the left cheek or the sole, then scribe these points on the heel of the plane body. Use the spring gauge and knife in your lines, then connect the three vertical spring lines along the sole. These are used to define the rabbet cuts that block out the profile.

Shape the Throat & Mouth

The throat is chopped out down to the bottom of the breast line. Work back close to the bed line, but don't cut right at either line just yet – these lines must be preserved for now in order to get a flat and straight bed. It's also important to stay inside the two scribed lines that define the inside width of the abutment. (After the throat is cut, the abutments are sawn to take the mouth to full width in the wedge slot.) This work requires concentration. Chop straight along the length of the sole as you hold the cutting tools at the skewed angle.

On the sole, use a narrow chisel to chop a shallow mortise to define the limits of the mouth, then drill 5/32" holes at each end of the mouth mortise and between to waste out the mouth. Angle your brace (or drill) using the layout lines on the cheeks; split the difference between the wear and bed lines.

Excavate the center region of the mortise until a saw or a thin edge float can be inserted. With the plane body on its side, saw the mortise from top to bottom using the bed layout line as a guide. Rasp or pare the mouth opening smooth and even, working to the wear line.

With the mouth open, the throat can be finished. As you work, use the bed gauge to check your progress and visually check that the slope of the developing bed and breast lines align with the knifed-in skew lines.

As you get closer to the final lines, switch to your modified firmer chisel, to pare down to the final surface. (Tools with angles that match the work will make it easier, and the resulting surface is nicer.) A bed float is also useful here. Because the plane's profile has not yet been cut, tear-out at the sole is not a problem at this point.

When the breast and bed are at their final dimensions, begin testing and tuning the angle and the flatness. Hold the plane up to eye level and tilt it to sight down each bed, and check for twist relative to the skew scribe lines on the surface of the plane. Smooth any high spots with a firmer chisel or a combination of bed float and fine rasp.

Cut the Abutment

The abutment is what gives the wedge leverage to hold the iron tight to the bed. Because the iron is skewed, the abutment is a series of acute and obtuse angles. In addition, the abutment slot has a slight taper from the mouth to the top of the plane body. Use your 10° testing wedge to gauge the shape of each abutment slot; try to make the two have the same taper. Once the slots are made, the 11° test wedge is used to determine the final shape of the plane's wedge.

Use a keyhole saw to carefully cut to the bottom of the abutment gauge line, checking frequently at the sole and top to make sure you don't cross the layout lines. (Note that the left cheek cut will be at an obtuse angle and the right cheek cut will be at an acute angle.) Make the second cut with the saw just proud of the bed face. Excavate the material between the kerfs using a narrow mortise chisel, paring chisels and side floats.

Test the extended bed using a wider mock iron and carbon paper to ensure that the bed and the abutments are coplanar.

Use the test wedge to gauge the two abutments. Work the wider abutment with edge and side floats so the wedge fits snugly along its length. Mark where the wedge exits the top of the plane

Don't open wide. *The mouth must be tight, so drill within the lines. I use a brace and shell bit because a shell is simple to adjust within the cut as needed.*

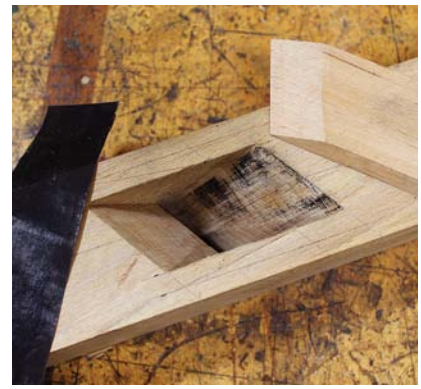

Flat & smooth. *It's useful to use the narrow mock-iron against a piece of carbon paper to rub the bed; that helps to indicate high spots.*

Tight quarters. *The small opening in the mouth requires a small saw. This is where the keyhole saw shines.*

Bed as reference. *To fair the bed to the abutments, place a paring chisel flat on the bed at an angle and skew cut into the abutments.*

body, then pare the other abutment until the wedge fits to the same depth.

Bring the Profile to Life

The profile is cut in three steps using rabbet and shoulder planes. First the bevel line is cut; it's a square rabbet cut. The second cut is to the fence, and finally the fillet cut is made (both are rabbets angled at 19º).

To make the square rabbet, set your marking gauge to the intersection of the fence spring line and the secondary horizontal spring line at the toe end of the plane. Mark the length along the sole. Next, set a marking gauge to the rabbet depth and mark along the length of the right cheek. Remove the waste to form the rabbet, cutting to the scribe lines on the heel, toe and right cheek.

The rabbet for the fence begins where the secondary vertical spring line intersects the rabbeted sole. Set a marking gauge to that width then scribe along the length of the sole. Use a narrow shoulder plane tilted at about 19º to cut the bed of the rabbet down to the horizontal spring line. Stay well shy of the scribe line on the sole of the plane as you work to the lines established on the toe and heel.

> "There is a great satisfaction in building good tools for other people to use."
>
> —*Freeman Dyson (1923-), theoretical physicist and mathematician*

Put the shoulder plane flat on the bed of the rabbet and carefully plane to the shoulder of the rabbet as defined by the scribe line on the sole. (If necessary, clean the corner of the rabbet using a scraper or chisel.)

Repeat the same steps to cut the fillet rabbet. This time, however, set your marking gauge to where the fillet spring line intersects the sole. Scribe the line along the length of the sole. Keep the cut level with the right cheek as you work.

Cut & Fit the Wedge

Remember that the wedge and the iron are inserted at the bed angle, so the wedge sides are angled to 23º, and with a tapered iron adding an extra degree to the abutment slot, the wedge is cut to a taper of 11º. It is also important that the wedge ears, which extend right up to the profile of the plane, press snugly into the sides of the mouth opening so as not to snag shavings. (One ear is buried in the left-abutment slot; the other is flush with the profile.)

Plane one edge of the wedge stock to 23º along its length. Set a marking gauge to just proud of the actual width of the bed (measured along the skew line, not the planar view). This should be in the range of $2\frac{1}{16}$". Mark the opposite edge of the wedge stock.

With a bevel gauge set to 15º, mark across the end of the wedge stock and saw off the waste. Use the 11º test wedge – aligned with the front corner of each side – to mark the long edges of the wedge stock. Make a tick mark where the angled lines intersect the wedge's upper face, then draw a line connecting the two marks. Cut the taper.

First profile cut. *Use a wide moving fillister plane, shoulder plane or a rabbet plane to cut the square rabbet to the scribe lines on the heel, toe and right cheek.*

Double-check. *There should be a gentle arris between the bevel face and the tongue face. Pencil the line to verify that it's straight and parallel along the length of the sole.*

With the iron in place, test-fit the wedge in the abutment. Pare the wedge as needed.

Trace out the internal profile of the throat on the wedge surface in pencil as shown on page 30. Cut out the wedge ears with a coping saw then pare the ramp. Set the wedge and iron in the plane and tap in the wedge.

Wedge beginnings. *Affix the wedge stock at the bench on top of a waste piece, then chop and pare the taper to your layout lines.*

Ear formation. *Mark where the wedge meets the top of the plane body then divide in half the space between this line and the leading edge of the wedge.*

Pencil in marks where the ears protrude from the mouth of the plane. Pare these as closely as possible then remove the wedge, cut the ears to length and refine their shape.

Make a 15° cut at top of the wedge. Knock off the two corners at 35° (off the long edge), and bevel the top edges of the wedge to the top of abutment (see "Wedge" illustration at right.)

Make & Set the Handle

The relatively short handle, which sits 1" deep in the body, is offset toward the right cheek by 1/8". (I believe this is so the handle is as close to the iron as possible without interfering with its adjustment.) The square edge of the handle mortise begins 7 3/16" from the toe.

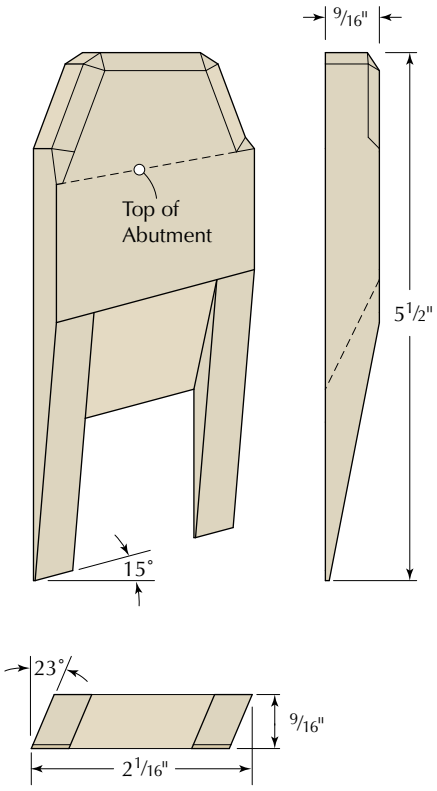

WEDGE

Draw the handle profile onto your stock, including an extra inch at the base. Cut it to shape with a coping saw, band saw or a bowsaw, then use rasps to make and fair the curved edges.

Once the handle is shaped, cut off the holding waste from the bottom then transfer the rear profile onto the plane body. Chop and pare the mortise cheeks. Use a gouge to shape the rear wall of the mortise and a router plane to take the mortise to final depth. Test-fit the handle and make any needed adjustments, but don't install it until the final shaping of the plane body is completed.

Detail the Plane Body

Trim the plane to final length (I recommend a miter box for this step). Use a rasp to round over the heel to a 3/8"-radius. Mark 1" down from the top at all four corners to locate a stopping point for the chamfers, which are 1/4" wide x 3/16" deep. Chisel the end-grain chamfers, then plane the long-grain chamfers so they meet in a miter at the nose. At the rear, the chamfers should fair into each other matching the curvature of the heel.

The cheeks of the throat are tapered to the breast line, beginning at the abutment, then the "eyes" – decorative teardrop-shaped cuts along the cheeks – are cut with a sharp curvature in about 1/2" from the abutment, parallel with the cheeks.

Clean up the surfaces of the plane body with light smoothing plane passes, then apply glue and set the handle into the mortise.

Again scribe the vertical spring line on the toe referencing the bevel gauge off the top of the plane and the primary horizontal spring line referencing off the left check. Make these lines deep and highlight them with a pencil. These two lines are helpful in keeping the plane correctly oriented during use.

The last step is to prepare the iron; see "Shape & Sharpen the Iron" at right.

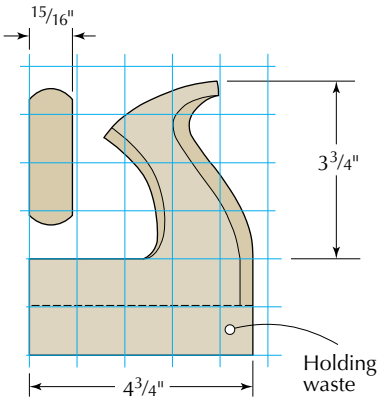

HANDLE PROFILE

Grid = 1" Squares

Wider is better. *Add 1" to the bottom of the handle profile for an easy and out-of-the-way hold as you fair curves on the grip.*

Mortise to fit. *Drill the mortise just shy of 1" depth using a bit that is slightly smaller than the handle's thickness*

Work around the mouth. *Trim the cheeks by paring along the layout lines, then add "eyes" as a decorative touch.*

The eyes have it. *"Eyes" add a pleasing visual touch to your plane.*

The Panel Raiser at Work

This plane works best on 5/8"-thick stock to leave a tongue that is about 1/4" thick; that allows the panel to fit nicely into a frame composed of 3/4" stock with a 1/4" groove. Select your panel for straight, even grain – quartersawn wood is best.

As always, before you use the plane on prime stock, cut a test panel until the fillet emerges. Set a marking gauge to this width and use this setting to deeply scribe the area of the field on the panel. This helps reduce tear-out on the end grain. Also, you should have a grooved, short piece of the frame stock available to gauge the tongue.

Begin with the end-grain cuts of the panel. Pay close attention to the vertical spring lines so that the fillet has a crisp profile. Follow that with cuts to the long-grain edges of the panel until the corners meet in sharp miters. (You may need to adjust the spring angle of the plane so the fillets are the same depth around the panel.)

If the fillets are not as crisp as you desire, or the bevels have some tear-out, use a shoulder plane to work these areas. Whatever you do to one edge, you will undoubtedly need to do on the adjoining edges as well. The miters need be sharp and precise, however, only for the visual effect.

I realize this panel-raising plane is a challenging build – but as my students who've built it can tell you, it's worth the effort. Not only will the plane allow you to make perfect raised panels, you'll have the satisfaction of using a tool custom-made in your own shop. **PWM**

Willard is a retired research scientist who teaches woodworking at The Woodwright's School and other locations. His web site is edwardsmountainwoodworks.com.

SHAPE & SHARPEN THE IRON

Paint the face of the iron with machinist's fluid and let this dry. Assemble the plane and adjust it so the iron protrudes just enough to evaluate its profile relative to the sole. Scribe the profile onto the iron with an awl, trying to make single marks. Square-grind the edge to the marked profile (there will be three straight bevels).

Grind the two long bevels first, and get the iron shape precise before moving on.

Begin grinding the fillet (the short bevel) back to the profile. This should be a careful test-and-fit approach. If the fillet is ground too aggressively, a good portion of the length of the iron will have to be ground off to get past that area.

Once the iron is blocked out, begin grinding the bevels. The two long edges of the iron are beveled at around 25°. The fillet is beveled at a far more obtuse angle (in the 60° range) to maintain the strength of the cutter.

Work just shy of the edge and be sure to frequently cool the iron so as not to draw the temper. The cutting edges of the iron have a hollow grind at this point. Hone on a combination of diamond and waterstones. — WA

Blade modification. *The blade needs a bit of shaping to work in your plane. Scratch the profile, grind it to shape then sharpen.*

ONLINE EXTRAS

For links to all online extras, go to:

- **popularwoodworking.com/nov13**

BLOG: *Take a look inside Bill Anderson's Edwards Mountain Woodworks.*

ARTICLE: *Learn three additional ways to make raised panels.*

IN OUR STORE: *Pick up a copy of the new book "Woodworker's Guide to Handplanes."*

TO BUY: *Hock Tools (hocktools.com) sells blade blanks for this plane.*

Our products are available online at:

- **ShopWoodworking.com**